ADDITIONAL DRAWINGS:

1. STRUCTURAL ENGINEERING DRAWINGS AS LISTED:

S-1 Foundation Plan
S-2 Roof Framing Plan
S-3 Sections
S-4 Section and Detail

2. MECHANICAL ENGINEERING DRAWINGS AS LISTED:

M1.0 General Notes, Drawing List, Key Map, Site Map, & Legend
M1.1 Mechanical Schedules & Details
M2.1 Proposed Demolition HVAC Plan
M2.2 Proposed HVAC Plan
M2.3 Proposed HVAC Roof Plan

P1.1 Proposed Demolition Plumbing Plan
P1.2 Proposed Plumbing Plan

3. ELECTRICAL ENGINEERING DRAWINGS AS LISTED:

E1.1 Electrical Notes & Key Plan
E1.2 Legends, Light Schedule, Details, Panel Schedule & Coordination Table
E2 Electrical Site Plan
E3 Electrical & Lighting Demolition Plans
E4 Electrical & Lighting Plans

NOTES OF CONCRETE CONSTRUCTION

1. Concrete work and detailing of reinforcing shall comply with CSA A23.3, latest edition.
2. Concrete cover to main steel to be as follows:
   Column and Beam – 50mm
   Slab and Wall Not Exposed to Weather – 25mm
   Slab and Wall Exposed Directly to Weather :
   38mm for 15 M or Smaller Bar,
   50mm for 20 M or larger Bar.
3. Provide 2 – 15 m around all openings in concrete walls or slabs. Extend bars at least 800 mm beyond the corners of the opening or typical detail, whichever is larger. Provide 2 – 15 m x 2000mm diagonal rebar at opening corner wherever opening is wider than 1200 mm.
4. Continuous reinforcing bars shall be lapped at splices and corner for a length of 36 x bar dia. for 400 MPa yield stress steel, unless otherwise noted.
5. Maximum length of pour in concrete wall shall not exceed 12m between keyed construction joints. Chases for slab and pockets for beam shall be provided.
6. Contractor shall verify dimensions and locations of slot, pipes, sleeves, embedment plates, inserts, etc., as required for other trades before concrete is poured.
7. Sizes and locations of openings refer to Architectural, Mechanical and Electrical Drawings.
8. Provide 100 mm P.V.C. water stop at all construction joints of external walls and / or butting slabs, unless noted.

NOTES ON MASONRY CONSTRUCTION

1. Standard concrete block – H/2000/A/M
2. Solid concrete block – 75% solid S/2000/A/M. Call "SOLID BLOCK" on drawing.
3. Concrete block marked "add vert. reinforcement/or 2–15m, etc." shall be solid filled full floor height by concrete grout (3000 psi), on block width minimum.
4. Conform to requirements of CSA S304 and S304.1, masonry design and construction for buildings.
5. Masonry construction shall be inspected and tested by the Independent qualified inspection of masonry construction.
6. Provide minimum horizontal reinforcement for block wall (heavy–duty wire size 3/16" dia.) at 16" o.c. vertically, corrosion–resistant steel rods, or reinforcement marked on the drawing. (dur–o–wall or block
7. Provide minimum beam bearing plate 1/2"x 10" with anchors 2–15m x 12"lg., unless heavier plate marked on drawing.
8. Masonry wall shall be reinforced as following: (unless noted on plan) Vertical reinforcing shall be grouted in void of masonry block with high slump concrete. (For location see plan)

Wall Thickness	Vertical Reinforcing	Horizontal Reinforcing
8", 10", 12"	15m @ 32" c/c	@ every second course (H.D.)

STRUCTURAL STEEL NOTES

1. All Structural steel fabrication and erection to conform to the requirements of CSA Standard S16.1.
2. Structural steel to be equal to CSA G40, 21–M.
   a) Rolled Shapes and Plates – Grade 300 W
   b) Hollow Structural Section – Grade 350 W
3. All forces and moments shown on the drawings are unfactored loads.
4. Beam connection shall be designed with additional axial force shown on the drawings.
5. For beam connections, provide a minimum of 2 bolts for W300 beam or smaller; a minimum of 3 bolts for W400 and W450, and a minimum of 4 bolts for W630 and W610.
6. All bolts shall be A325 high strength bolts, friction values shall be used for a 5% probability of slip. A490 high strength bolts for the knee connection of the frame.
7. All welds shall be made with E480XX electrode.
8. Exposed structural steel shall achieve a neat appearance; defects such as rough ends cuts, bolts, weld splatter, rough welds will not be acceptable.
9. All girt shall be slot connected (in and out) and adjustable for the wall panel in line. All connections will be field welded after wall panels in location.
10. All window openings shall be smooth and neat, no bolts, no connection angles or plate on the face of window opening.
11. Welding connection of HSS should be all around.
12. Provide end plate 6mm or for all exposed and exterior hollow structural section members.
13. all exposed steel to be hot dip galvanized.

FOUNDATION NOTES

1. Foundation design is based on an allowable bearing pressure of 3000 PSF
2. Footing excavations shall be inspected by a registered soils engineer before concrete is placed.
3. All exterior wall and column footings are to be 1220 mm minimum below exterior finished grade, except as noted.
4. Slab on grade shall be 4" thick for fabric 305x305 – MW37.4/MW37.4 WWF.
5. Provide slab thickening for masonry partition walls as shown in typical detail Drawing No. 6/S5
6. All bearing wall footings shall have 150 mm projection and 250 mm deep with 3 – 15M bottom cont. unless noted.
7. Elevations to top of footing (T/F) are __, except noted on plan. (RE. F.F. = 100)
8. S.F. on plan denotes stepped footing, see typical detail on Drawing No.
9. Remove all organic topsoil and compact the original soil prior to placing additional.
10. All granular fill (Type B) to be compacted to ___% Standard Proc.
11. Provide support at top of exterior wall where top slab cannot be poured until backfill is placed. Where backfill is placed on each side of foundation walls, the grade difference shall not exceed 600mm .
12. See soil report for all the foundation requirement, including founding level, water & drainage problem, slab on grade, excavation back fill, footing construction method and etc.

UNDERPINNED FOUNDATION NOTES

1. Underpinned foundation shall be divided to several bays for excavation and construction; each bay is 3'–0" wide maximun.
2. No consecutive bays can be excavated simultaneously.
3. Excavation and concrete pouring in the same bay should be done in the same day.
4. No excavation next to the newly poured concrete bay until five (5) days after the concrete pouring.
5. Contractors provide temporary supports during construction and renovation.
6. Contractor to grout the gap (+/–2") between the underside of existing foundation and top of new poured concrete, with dry–pack, non–shrinking grout (Sternson M–bed standard or equivalent). Contractor to make sure there are no voids between existing foundation and new underpinned foundation.
7. The width of underpinning should match the width of existing footing.
8. The foundation excavation should be inspected by a Registered Soils Engineer. The minimum soil bearing of underpinned foundation should be the same as soil bearing marked on the foundation plan.

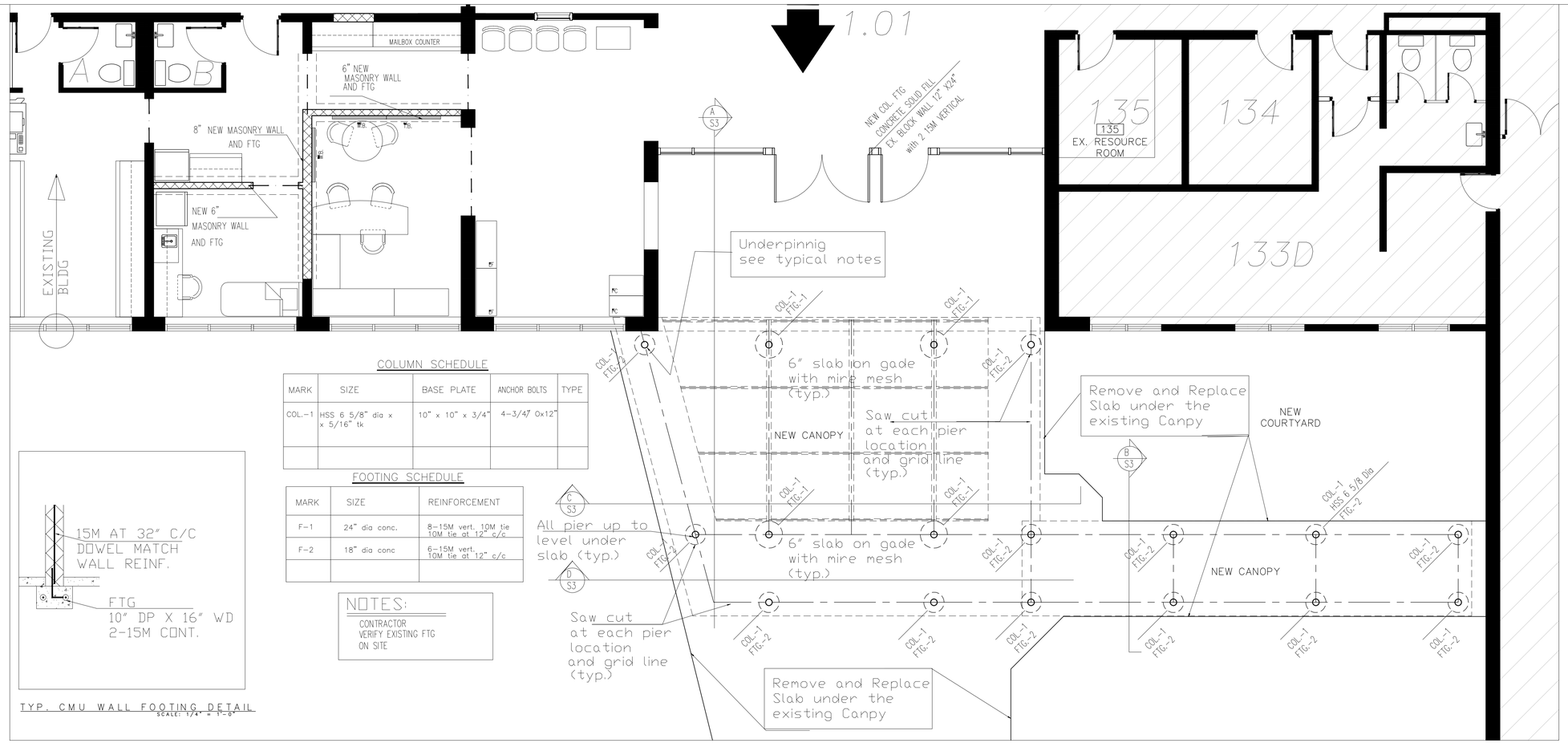

COLUMN SCHEDULE

MARK	SIZE	BASE PLATE	ANCHOR BOLTS	TYPE
COL.–1	HSS 6 5/8" dia x x 5/16" tk	10" x 10" x 3/4"	4–3/4" 0x12"	

FOOTING SCHEDULE

MARK	SIZE	REINFORCEMENT
F–1	24" dia conc.	8–15M vert. 10M tie 10M tie at 12" c/c
F–2	18" dia conc	6–15M vert. 10M tie at 12" c/c

NOTES:
CONTRACTOR VERIFY EXISTING FTG ON SITE

TYP. CMU WALL FOOTING DETAIL
SCALE: 1/4" = 1'–0"

FOUNDATION PLAN
SCALE: 1/4" = 1'–0"

S–1

THESE DRAWINGS ARE NOT TO BE SCALED

ALL DRAWINGS, THE DESIGN, AND THE DETAILS THEREON REMAIN THE PROPERTY OF THE ARCHITECT AND ARE NOT TO BE ALTERED, RE–USED OR REPRODUCED WITHOUT THE ARCHITECT'S EXPRESS WRITTEN CONSENT.

THE CONTRACTOR MUST FIELD VERIFY ALL DIMENSIONS AND MUST CONFIRM & CORRELATE ALL DETAILS WITHIN THE FULL DRAWING PACKAGE BEING RESPONSIBLE FOR SAME THROUGHOUT CONSTRUCTION, REPORTING ANY DISCREPANCIES TO THE ARCHITECT PRIOR TO COMMENCING THE RELEVANT WORK

ALL DRAWINGS, DETAILS & SPECIFICATIONS REPRESENTED IN THE DRAWINGS ARE TO BE USED FOR CONSTRUCTION ONLY WHEN ISSUED BY THE ARCHITECT AND NOTED ACCORDINGLY IN THE "ISSUE/REVISIONS" SCHEDULE.

ISSUE/REVISION	
ISSUED FOR PRICING	16/05/2023
ISSUED FOR REVISION	22/02/2024
ISSUED FOR REVISION	12/03/2024
Issued For Permit	8–4–2024
Issued For Tender	18–4–2024

LEE YUNG
AND ASSOCIATES INC
STRUCTURAL
CONSULTING ENGINEERS
2550 Matheson Blvd. East #124
MISSISSAUGA
ONTARIO L4W 4Z1
TEL: (905) 238–1338
MOBILE: (905) 815–7887

SEAL:

REGISTERED PROFESSIONAL ENGINEER
T.L. YUNG
4/24
PROVINCE OF ONTARIO

PROJECT:
Alterations to:
ST. THERESE CATHOLIC ELEMENTARY SCHOOL
530 Killaly St. East, Port Colborne ON
for the NIAGARA CATHOLIC DISTRICT SCHOOL BOARD

DRAWING TITLE:
FOUNDTION PLAN

SCALE: AS NOTED
DRAWN: H.O,
DATE: DEC. 2023
PROJECT #: 2316/ J223–11

S–1

PLOTTED 4/17/2024 2:52 PM

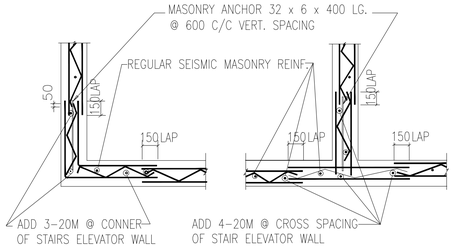

TYPICAL DETAILS AT WALL INTERSECTIONS

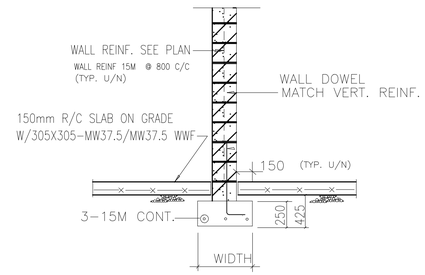

TYPICAL DFTAIL OF INTERIOR BEARING WALL FOOTING

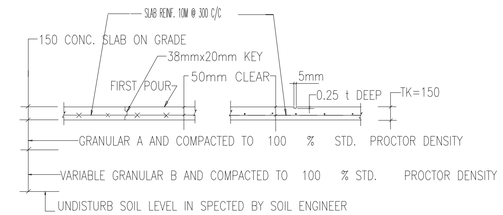

CONSTRUCTION JOINT AND SAW CUT CONTROL JOINT DETAILS

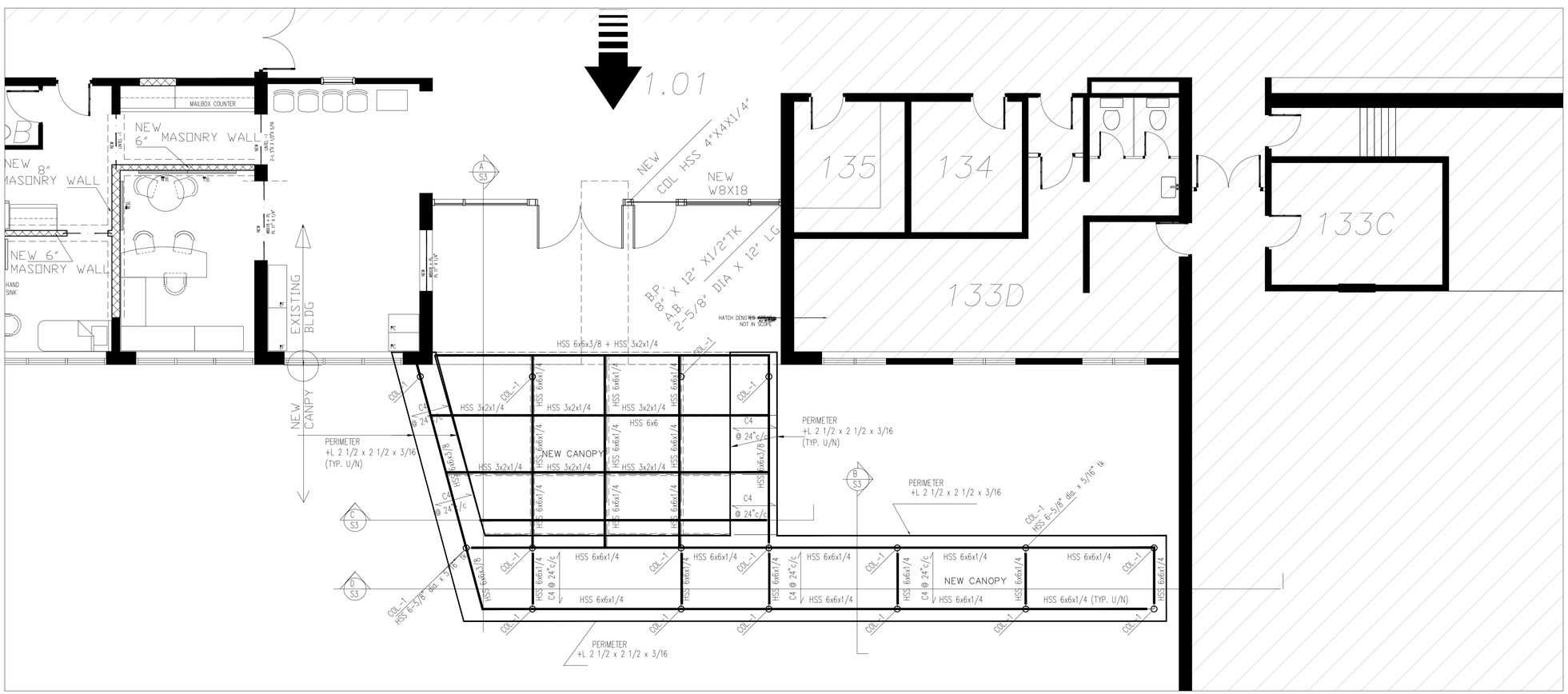

CANOPY FRAMING PLAN

SCALE: 1/4" = 1'-0"

S-2

THESE DRAWINGS ARE NOT TO BE SCALED

ALL DRAWINGS, THE DESIGN, AND THE DETAILS THEREON REMAIN THE PROPERTY OF THE ARCHITECT AND ARE NOT TO BE ALTERED, RE-USED OR REPRODUCED WITHOUT THE ARCHITECT'S EXPRESS WRITTEN CONSENT.

THE CONTRACTOR MUST FIELD VERIFY ALL DIMENSIONS AND MUST CONFIRM & CORRELATE ALL DETAILS WITHIN THE FULL DRAWING PACKAGE BEING RESPONSIBLE FOR SAME THROUGHOUT CONSTRUCTION, REPORTING ANY DISCREPANCIES TO THE ARCHITECT PRIOR TO COMMENCING THE RELEVANT WORK

ALL DRAWINGS, DETAILS & SPECIFICATIONS REPRESENTED IN THE DRAWINGS ARE TO BE USED FOR CONSTRUCTION ONLY WHEN ISSUED BY THE ARCHITECT AND NOTED ACCORDINGLY IN THE "ISSUE/REVISIONS" BLOCK HEREON.

ISSUED FOR REVIEW	28-2-2024
Issued For Permit	8-4-2024
Issued For Tender	18-4-2024

LEE YUNG
AND ASSOCIATES INC
STRUCTURAL
CONSULTING ENGINEERS
2550 Matheson Blvd. East #124
MISSISSUAGA
ONTARIO L4W 4Z1
TEL: (905) 238-1338
MOBILE: (905) 815-7887

SEAL:

REGISTERED PROFESSIONAL ENGINEER
T.L. YUNG
4/14/24
LICENCE OF ONTARIO

PROJECT:

Alterations to:
ST. THERESE
CATHOLIC
ELEMENTARY
SCHOOL
530 Killaly St. East,
Port Colborne ON

for the
NIAGARA
CATHOLIC
DISTRICT
SCHOOL
BOARD

DRAWING TITLE:

ROOF
FRAMING PLAN

SCALE:
AS NOTED

DRAWN:
H.O.

DATE:
DEC. 2023

PROJECT #:
2316/ J223-11

S-2

PLOTTED 4/17/2024 2:55 PM

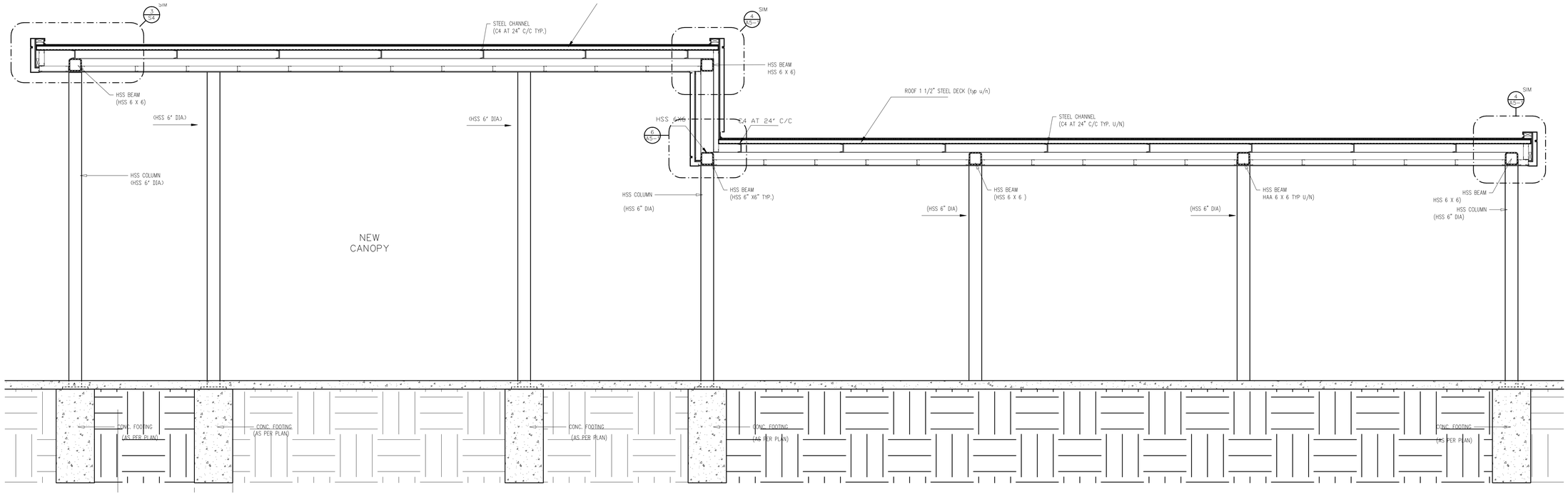

SECTION D
SCALE: 1/2" = 1'-0"

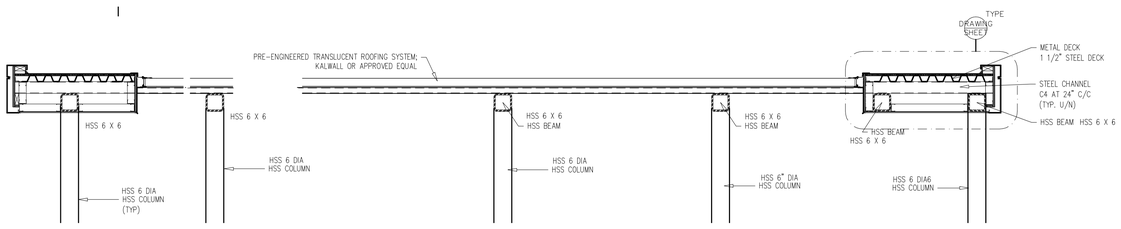

SECTION C
SCALE: 1/2" = 1'-0"

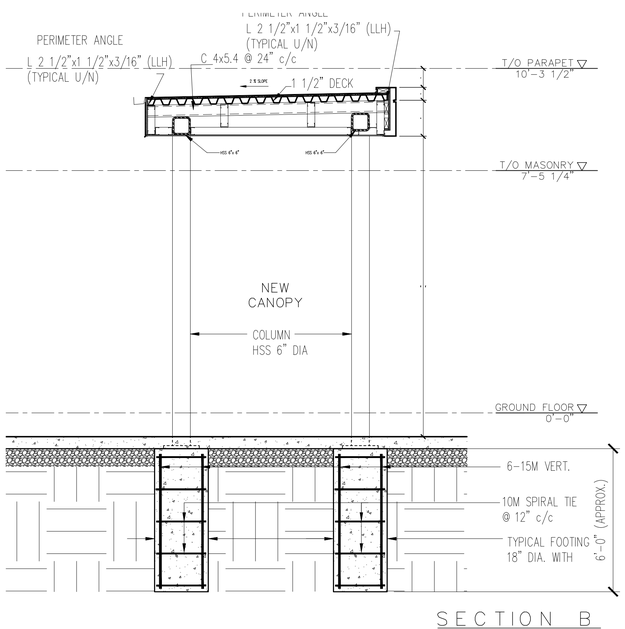

SECTION B
SCALE: 1/2" = 1'-0"

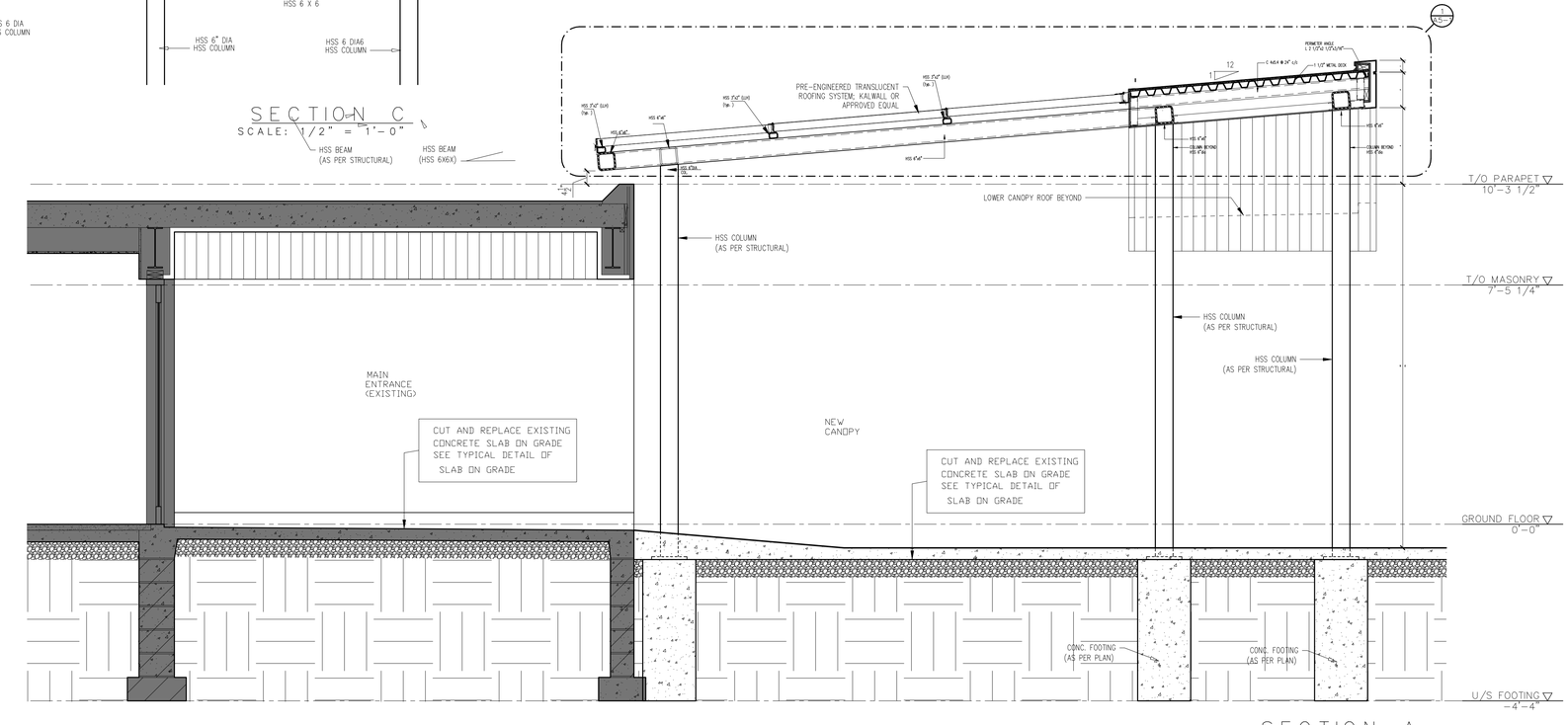

SECTION A
SCALE: 1/2" = 1'-0"

S-3

THESE DRAWINGS ARE NOT TO BE SCALED.

ALL DRAWINGS, THE DESIGN, AND THE DETAILS THEREON REMAIN THE PROPERTY OF THE ARCHITECT AND ARE NOT TO BE ALTERED, RE-USED OR REPRODUCED WITHOUT THE ARCHITECT'S EXPRESS WRITTEN CONSENT.

THE CONTRACTOR MUST FIELD VERIFY ALL DIMENSIONS AND MUST CONFIRM & CORRELATE ALL DETAILS WITHIN THE FULL DRAWING PACKAGE BEING RESPONSIBLE FOR SAME THROUGHOUT CONSTRUCTION, REPORTING ANY DISCREPANCIES TO THE ARCHITECT PRIOR TO COMMENCING THE RELEVANT WORK

ALL DRAWINGS, DETAILS & SPECIFICATIONS REPRESENTED IN THE DRAWINGS ARE TO BE USED FOR CONSTRUCTION ONLY WHEN ISSUED BY THE ARCHITECT AND NOTED ACCORDINGLY IN THE "ISSUE/REVISIONS" BOX HEREON.

ISSUED FOR PRICING	16/05/2023
Issued For Permit	8-4-2024
Issued For TENDER	18-4-2024

LEE YUNG
AND ASSOCIATES INC
STRUCTURAL
CONSULTING ENGINEERS
2550 Matheson Blvd. East #124
MISSISSUAGA
ONTARIO L4W 4Z1
TEL: (905) 238-1338
MOBILE: (905) 815-7887

SEAL:

REGISTERED PROFESSIONAL ENGINEER
T.L. YUNG
8/4/24
PROVINCE OF ONTARIO

PROJECT:

Alterations to:
ST. THERESE
CATHOLIC
ELEMENTARY
SCHOOL
530 Killaly St. East,
Port Colborne ON

for the
NIAGARA
CATHOLIC
DISTRICT
SCHOOL
BOARD

DRAWING TITLE:

SECTIONS

SCALE:	AS NOTED
DRAWN:	H.O.
DATE:	DEC. 2023
PROJECT #:	2316/ J223-11

S-3

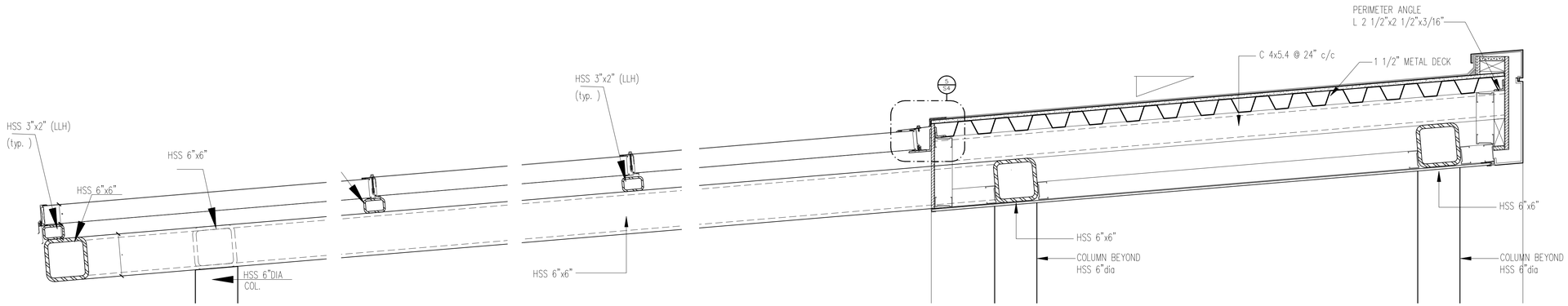

DETAIL – HIGH ROOF (1/A4-7)
SCALE: 1 1/2" = 1'-0"

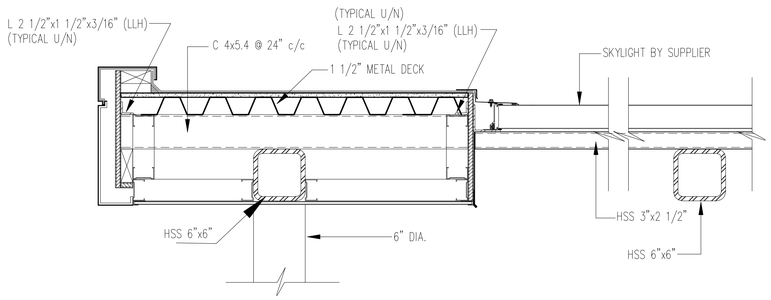

DETAIL: HIGH ROOF (REAR) (3/A4-7)
SCALE: 1 1/2" = 1'-0"

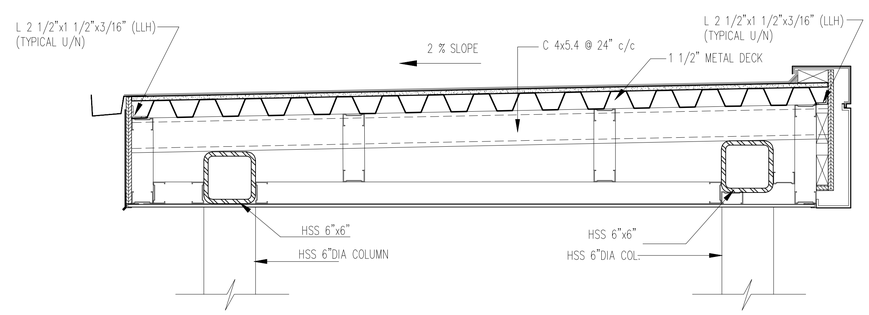

DETAIL: LOW ROOF (2/A4-7)
SCALE: 1 1/2" = 1'-0"

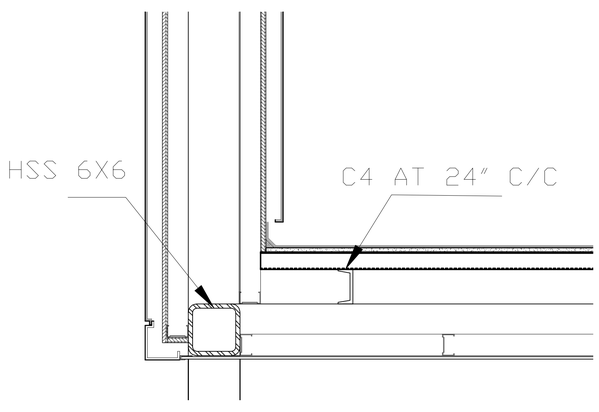

DETAIL: HIGH ROOF (REAR) (4/A4-7)
SCALE: 1 1/2" = 1'-0"

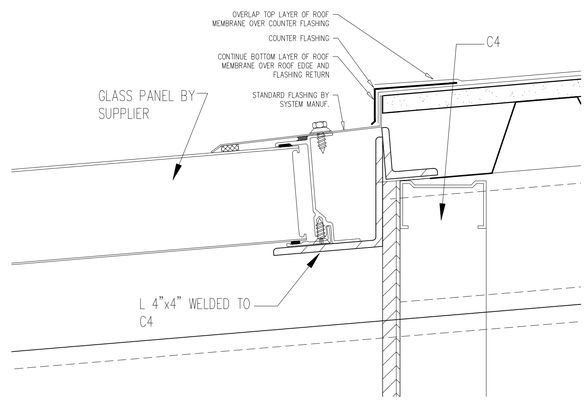

DETAIL: FLASHING (5/A4-7)
SCALE: 6" = 1'-0"

THESE DRAWINGS ARE NOT TO BE SCALED.

ALL DRAWINGS, THE DESIGN, AND THE DETAILS THEREON REMAIN THE PROPERTY OF THE ARCHITECT AND ARE NOT TO BE ALTERED, RE-USED OR REPRODUCED WITHOUT THE ARCHITECT'S EXPRESS WRITTEN CONSENT.

THE CONTRACTOR MUST FIELD VERIFY ALL DIMENSIONS AND MUST CONFIRM & CORRELATE ALL DETAILS WITHIN THE FULL DRAWING PACKAGE BEING RESPONSIBLE FOR SAME THROUGHOUT CONSTRUCTION, REPORTING ANY DISCREPANCIES TO THE ARCHITECT PRIOR TO COMMENCING THE RELEVANT WORK

ALL DRAWINGS, DETAILS & SPECIFICATIONS REPRESENTED IN THE DRAWINGS ARE TO BE USED FOR CONSTRUCTION ONLY WHEN ISSUED BY THE ARCHITECT AND NOTED ACCORDINGLY IN THE "ISSUE/REVISIONS" BOX HEREON.

ISSUED FOR PRICING	16/05/2023
Issued For Permit	8-4-2024
Issued For TENDER	18-4-2024

LEE YUNG
AND ASSOCIATES INC
STRUCTURAL
CONSULTING ENGINEERS
2550 Matheson Blvd. East #124
MISSISSAUGA
ONTARIO L4W 4Z1
TEL: (905) 238-1338
MOBILE: (905) 815-7887

SEAL:

REGISTERED PROFESSIONAL ENGINEER
T.L. YUNG
17/4/24
PROVINCE OF ONTARIO

PROJECT:

Alterations to:
ST. THERESE
CATHOLIC
ELEMENTARY
SCHOOL
530 Killaly St. East,
Port Colborne ON

for the
NIAGARA
CATHOLIC
DISTRICT
SCHOOL
BOARD

DRAWING TITLE:

SECTION
AND DETAIL

SCALE:
AS NOTED

DRAWN:
H.O.

DATE:
DEC. 2023

PROJECT #:
2316/ J223-11

S-4

PLOTTED 4/17/2024 3:02 PM

GENERAL NOTES

1. GENERAL

1.1. ALL WORK SHALL BE PERFORMED IN A CLEAN AND WORKMANLIKE MANNER. CARE SHALL BE EXERCISED TO MINIMIZE ANY INCONVENIENCE OR DISTURBANCE TO OTHER AREAS OF THE BUILDING WHICH ARE TO REMAIN IN OPERATION. ISOLATE WORK AREAS BY MEANS OF TEMPORARY PARTITIONS AND/OR TARPS TO KEEP DUST AND DIRT WITHIN THE CONSTRUCTION AREA.

1.2. THE PLANS ARE INTENDED TO BE DIAGRAMMATIC AND ARE BASED ON ONE MANUFACTURER'S EQUIPMENT. THEY ARE NOT INTENDED TO SHOW EVERY ITEM IN ITS EXACT LOCATION, THE EXACT DIMENSIONS, OR ALL THE DETAILS OF THE EQUIPMENT. THE CONTRACTOR SHALL VERIFY THE ACTUAL DIMENSIONS OF THE EQUIPMENT PROPOSED TO ENSURE THAT THE EQUIPMENT WILL FIT IN THE AVAILABLE SPACE.

1.3. CONTRACTOR SHALL FIELD VERIFY ALL DIMENSIONS AND EXISTING CONDITIONS PRIOR TO PROCEEDING WITH ANY WORK. WHERE DISCREPANCIES OCCUR BETWEEN THESE DOCUMENTS AND EXISTING CONDITIONS, THE DISCREPANCY SHALL BE REPORTED TO THE OWNER AND/OR ENGINEER FOR EXPEDITING AND RESOLVE.

1.4. THE CONTRACTOR SHALL BE RESPONSIBLE FOR THE SAFEKEEPING OF HIS OWN PROPERTY ON THE JOB SITE. OWNER ASSUMES NO RESPONSIBILITY FOR PROTECTION OF PROPERTIES AGAINST FIRE, THEFT AND ENVIRONMENTAL CONDITIONS.

1.5. PRIOR TO STARTING CONSTRUCTION, DETERMINE EXACT INVERT ELEVATION, SIZE, DEPTH AND LOCATION OF EXISTING UTILITIES WHERE CONNECTIONS ARE TO BE MADE OR INTERSECTIONS OCCUR. NOTIFY ARCHITECT OR ENGINEER OF ANY DISCREPANCY BETWEEN DRAWINGS AND ACTUAL FIELD CONDITIONS. WORK BACK TOWARD BUILDING FROM UTILITY CONNECTION FOR ALL PIPING SYSTEMS.

1.6. ALL APPLICABLE CODES, LAWS AND REGULATIONS GOVERNING OR RELATING TO ANY PORTION OF THIS WORK ARE HEREBY INCORPORATED INTO AND MADE A PART OF THESE SPECIFICATIONS, AND THEIR PROVISIONS SHALL BE CARRIED OUT BY THE CONTRACTOR WHO SHALL INFORM THE OWNER, PRIOR TO SUBMITTING A PROPOSAL, OF ANY WORK OR MATERIALS WHICH VIOLATE ANY OF THE ABOVE LAWS AND REGULATIONS. ANY WORK DONE BY THE CONTRACTOR CAUSING SUCH VIOLATIONS SHALL BE CORRECTED BY THE CONTRACTOR.

1.7. INSTALL WORK SO AS TO BE READILY ACCESSIBLE FOR OPERATION, MAINTENANCE AND REPAIR. MINOR DEVIATIONS FROM DRAWINGS MAY BE MADE TO ACCOMPLISH THIS, BUT CHANGES WHICH INVOLVE EXTRA COST SHALL NOT BE MADE WITHOUT APPROVAL.

1.8. REMOVAL AND RELOCATION OF CERTAIN EXISTING WORK WILL BE NECESSARY FOR THE PERFORMANCE OF THE GENERAL WORK. ALL EXISTING CONDITIONS CANNOT BE COMPLETELY DETAILED ON THE DRAWINGS, THE CONTRACTOR SHALL SURVEY THE SITE AND INCLUDE ALL CHANGES IN MAKING UP THE WORK PROPOSAL.

1.9. SEAL ALL OPENINGS AROUND PIPES & DUCTS THROUGH PARTITIONS AND WALLS WITH APPROVED FIRESTOPPING MATERIAL MEETING ONTARIO BUILDING CODE, ASTM E814 AND NFPA-101, AS APPLICABLE.

1.10. MATERIALS AND WORKMANSHIP, UNLESS OTHERWISE NOTED, SHALL BE IN ACCORDANCE WITH BUILDING STANDARDS.

1.11. EQUIPMENT SUPPLIED BY CONTRACTOR THAT FALLS UNDER THE JURISDICTION OF ASHRAE 90.1-2010 SHALL MEET THE REQUIREMENTS OF THIS STANDARD IN ALL REGARDS.

1.12. THE WORK IN THE BUILDING SHALL BE DONE WHEN AND AS DIRECTED AND IN A MANNER SATISFACTORY TO THE OWNER.

1.13. CONTRACTOR TO SUBMIT A SET OF AS-BUILT DRAWINGS TO THE CONSULTANT FOR TRANSFER TO CAD FILE. INCLUDE FOR CONSULTANTS COST TO UPDATE DRAWING TO AS-BUILT & PLOT. CONTRACTOR TO CARRY $500 FOR CONSULTANTS COST.

2. SCOPE OF WORK

2.1. THE CONTRACTOR IS RESPONSIBLE FOR ALL WORK, MATERIALS, AND LABOR TO SATISFY A COMPLETE WORKING SYSTEM WHETHER SPECIFIED OR IMPLIED.

2.2. THE WORK UNDER CONTRACT INCLUDES ALL LABOR, MATERIALS, AND APPLIANCES NECESSARY FOR THE FURNISHING, INSTALLATION AND TESTING, COMPLETE AND READY FOR SAFE OPERATION OF THE SYSTEMS. WORK SHALL BE INSTALLED IN A NEAT, WORKMANLIKE MANNER. INCLUDE ALL COSTS FOR PERMITS, LICENSES AND CERTIFICATE FILING AND INSPECTIONS REQUIRED BY AUTHORITIES HAVING JURISDICTION.

2.3. ALL EQUIPMENT AND MATERIALS SHALL BE AS SPECIFIED OR "APPROVED EQUAL" BY ENGINEER OR ARCHITECT.

2.4. CONTRACTOR MAY ELECT TO SUBMIT ALTERNATES IN PLACE OF SPECIFIED MECHANICAL EQUIPMENT. CONTRACTOR SHALL INCLUDE ALL SPECIFIED MAJOR EQUIPMENT IN THE BASE BID, AND SHALL SHOW LINE ITEM PRICE REDUCTIONS FOR ANY PROPOSED ALTERNATES. ALTERNATES FOR MINOR EQUIPMENT MAY BE SUBSTITUTED WITHOUT PRESENTING LINE ITEM PRICE REDUCTIONS. FINAL APPROVAL OF ALL ALTERNATES SUBJECT TO THE ENGINEER'S REVIEW.

2.5. CONTRACTOR IS RESPONSIBLE FOR ALL COSTS OF ALL TRADES ASSOCIATED WITH ANY SUBSTITUTION OF AN ALTERNATE, INCLUDING CHANGES IN DUCT OR PIPING ARRANGEMENT OR SIZE, BREAKER SIZE, REQUIRED ANCILLARY COMPONENTS, ADDITIONAL SUPPORTS, WIRING, ETC., TO ACHIEVE A FULLY COMPLIANT AND OPERATIONAL SYSTEM TO MATCH THE BASE BID SPECIFICATION.

3. PERMITS

3.4. THE CONTRACTOR SHALL SECURE ALL PERMITS OR APPLICATIONS AND PAY ANY AND ALL FEES.

4. SHOP DRAWINGS

4.1. SUBMIT EQUIPMENT AND FIXTURE SHOP DRAWINGS TO THE ENGINEER FOR APPROVAL PRIOR TO PURCHASE, INSTALLATION OR FABRICATION. THE CONTRACTOR SHALL NOT PROCEED UNTIL APPROVED SHOP DRAWINGS ARE RETURNED FROM THE ENGINEER.

4.2. DO NOT SUBSTITUTE ANY HARDWARE OR FIXTURES WITHOUT PRIOR APPROVAL FROM THE ENGINEER.

4.3. CLEARLY INDICATE ON THE SHOP DRAWINGS THE NAME OF THE PROJECT AS STATED ON THE MECHANICAL DRAWINGS.

4.4. CLEARLY INDICATE ON THE SHOP DRAWINGS, THE ITEM OR TYPE REFERENCE NUMBER FROM THE MECHANICAL DRAWING SCHEDULES. WHERE NO SCHEDULE ITEM OR TYPE IS PRESENT, INDICATE DRAWING NUMBER, REVISION AND EQUIPMENT TAG.

5. COMMISSIONING

5.1. THE MECHANICAL CONTRACTOR SHALL TEST, ADJUST, STARTUP, AND PLACE INTO PROPER OPERATION ALL EQUIPMENT AND SYSTEMS INSTALLED UNDER THIS CONTRACT. PRIOR TO THE STARTUP OF ANY EQUIPMENT OR SYSTEM, THE CONTRACTOR SHALL MAKE CERTAIN THAT ALL EQUIPMENT IS CLEAN AND FREE OF FOREIGN MATTER, ALL BEARINGS ARE LUBRICATED AND ALL PRECAUTIONS HAVE BEEN FOLLOWED IN ACCORDANCE WITH THE EQUIPMENT MANUFACTURER'S INSTRUCTIONS.

6. GUARANTEE

6.1. FURNISH A WRITTEN GUARANTEE TO REPLACE OR REPAIR PROMPTLY AND ASSUME RESPONSIBILITY FOR ALL EXPENSES INCURRED FOR ANY WORKMANSHIP AND EQUIPMENT IN WHICH DEFECTS DEVELOP WITHIN ONE YEAR FROM THE DATE OF ACTUAL USE OF EQUIPMENT OR OCCUPANCY OF SPACES BY OWNER, WHICHEVER DATE IS EARLIER. THIS WORK SHALL BE DONE AS DIRECTED BY THE OWNER. WHERE DEFECTS OCCUR, ASSUME RESPONSIBILITY FOR ALL EXPENSES INCURRED IN REPAIRING AND REPLACING WORK OF THE OTHER TRADES AFFECTED BY DEFECTS.

HVAC NOTES

1. GENERAL

1.1. ALL WORK SHALL BE CARRIED OUT IN ACCORDANCE WITH THE REQUIREMENTS OF THE ONTARIO BUILDING CODE, ONTARIO ENERGY EFFICIENCY ACT, THE ONTARIO CONSTRUCTION SAFETY ACT AND REGULATIONS AND THE MINISTRY OF LABOUR GUIDELINES.

1.2. CONTRACTOR SHALL CHECK AND VERIFY ALL DIMENSIONS AT THE SITE BEFORE PROCEEDING WITH ANY WORK.

1.3. INSTALLATION IN ACCORDANCE WITH THE LATEST EDITION OF THE ONTARIO BUILDING CODE AND NFPA 90A "STANDARD FOR THE INSTALLATION OF AIR-CONDITIONING AND VENTILATING SYSTEMS."

1.4. ALL SHEET METAL WORK MUST BE PERFORMED BY LICENSED, JOURNEYMAN SHEET METAL WORKERS POSSESSING A VALID CERTIFICATE OF QUALIFICATION (308A) FROM THE MINISTRY OF TRAINING, COLLEGES AND UNIVERSITIES IN THE PROVINCE OF ONTARIO.

2. MATERIALS AND INSTALLATION

2.1. LOCATION OF DUCTWORK AND EQUIPMENT.

2.1.1. INSTALL AS REQUIRED FOR PROPER INSTALLATION IN AVAILABLE SPACE AVOIDING INTERFERENCE WITH ARCHITECTURAL AND STRUCTURAL MEMBERS AND WORK OF OTHER TRADES.

2.1.2. PRESERVE HEADROOM AND KEEP OPENINGS AND PASSAGE WAYS CLEAR.

2.1.3. INSTALL DUCTS AS SHOWN IN A NEAT MANNER, SYMMETRICAL WITH BUILDING LINES, LIGHTS, ACOUSTICAL TILE PATTERN, ETC.

2.1.4. DRAWINGS ARE DIAGRAMMATIC AND APPROXIMATE AND ARE SUBJECT TO REARRANGEMENT FOR PROPER INSTALLATION. CERTAIN RUNS OF DUCTWORK AND PIPING SHOWN DISTORTED TO AVOID CONFUSION.

2.2. ACCESS TO DUCTS AND CONCEALED EQUIPMENT. IT SHALL BE THE RESPONSIBILITY OF THE INSTALLING CONTRACTOR TO PROVIDE GENERAL CONTRACTOR WITH THE DESIRED LOCATION OF EACH ACCESS DOOR OR PANEL REQUIRED IN CEILING OR WALLS FOR ACCESS TO ALL CONCEALED DAMPERS, CONTROLLERS, ETC.

2.3. CONTRACTOR IS RESPONSIBLE FOR CLEANING OF PREMISES, REMOVAL OF SCRAPS AND INSTALLATION RELATED DEBRIS FROM AREA. LEAVE ENTIRE INSTALLATION IN A NEAT, CLEAN AND USABLE CONDITION.

2.4. CONTRACTOR IS RESPONSIBLE FOR HOISTING AND SETTING IN PLACE OF ALL FURNISHED HEATING, AIR CONDITIONING, EXHAUST AND MAKE-UP AIR EQUIPMENT, UNLESS OTHERWISE SPECIFIED.

2.5. EQUIPMENT. TYPE AND SIZE AS SHOWN AND DESCRIBED ON THE DRAWINGS. PERFORMANCE IN CONFORMANCE WITH THE ONTARIO ENERGY EFFICIENCY ACT.

2.6. SHEET METAL WORK

2.6.1. GAUGE AND CONSTRUCTION: GALVANIZED SHEET METAL IN ACCORDANCE WITH RECOMMENDATIONS OF S.M.A.C.N.A. FOR LOW VELOCITY DUCTWORK, LATEST EDITION, AND IN COMPLIANCE WITH ALL NATIONAL AND LOCAL CODES AND REQUIREMENTS.

2.6.2. ALL HORIZONTAL DUCTS SHALL BE SUPPORTED ON AT LEAST 6'-9" CENTERS.

2.6.3. ALL ROUND DUCTS SHALL BE SUPPORTED WITH 1" 18 GAUGE GALVANIZED STEEL STRAP HANGERS AT 4'-0" CENTERS.

2.7. FLEXIBLE DUCT:

2.7.1. MATERIAL: PRE-INSULATED U.L. LISTED CLASS 1 FLEXIBLE FIBERGLASS AIR DUCT, ENCASED IN A FOIL SCRIM VAPOR BARRIER JACKET, CONSTRUCTED OF REINFORCED METALLIZED POLYESTER. DUCTS TO MEET REQUIREMENTS OF N.F.P.A. 90A FOR AIR DUCTS. ALL FLEX DUCT TO HAVE SAMPSON BAND REINFORCING.

2.7.2. MANUFACTURER: DEFLECT-O DUCT OR APPROVED EQUAL.

2.7.3. INSTALLATION: INSTALL IN FULLY EXTENDED POSITION. SUPPORT FLEX DUCT WITH 1 1/2" WIDE STEEL STRAPS AT 3'-0" MAX. DUCT RUNS SHALL NOT EXCEED 4' IN LENGTH.

2.8. DUCT SEALING (1" WC PRESSURE CLASS): ALL DUCT JOINTS, SEAMS, FITTINGS, ETC. SHALL BE SEALED TO SEAL CLASS A, TO ENSURE WATER AND AIR TIGHTNESS WITH DUCT SEALANT CARLISLE DUCT-SEAL 321 OR EQUAL, APPLIED IN ACCORDANCE WITH MANUFACTURER'S RECOMMENDATIONS.

2.9. MANUAL VOLUME (BALANCING) DAMPERS:

2.9.1. DAMPERS WITH EXTENDED HANDLES, LOCKING AND INDICATING QUADRANTS TO BE INSTALLED AS SHOWN ON DRAWINGS IN ADDITION TO ANY VOLUME CONTROLS AT OUTLETS.

2.9.2. AFTER FINAL ADJUSTMENT OF SYSTEM, LOCK QUADRANTS AND MARK CLEARLY SHOWING DAMPER POSITION, OPEN AND SHUT POSITION.

2.9.3. DAMPERS IN ROUND DUCTS SHALL BE OF THE SINGLE BLADE TYPE.

2.9.4. DAMPERS IN RECTANGULAR DUCTS:
2.9.4.1. DUCTS 11" IN HEIGHT OR LESS SHALL BE OF THE SINGLE BLADE TYPE.
2.9.4.2. DUCTS 12" IN HEIGHT OR HIGHER SHALL BE OF THE OPPOSED BLADE TYPE.

2.10. INSULATION

2.10.1. DUCT LINING: FIRST 10' OF SUPPLY AND RETURN DUCT OF ALL RTU'S TO BE ACOUSTICALLY LINED WITH LINING MEETING REQUIREMENTS OF N.F.P.A. 90A AND INSTALLED AS PER MANUFACTURER'S RECOMMENDATIONS. DUCT DIMENSIONS SHOWN ON DRAWINGS ALLOW FOR THICKNESS OF ACOUSTIC INSULATION.

2.10.2. DUCT INSULATION - DUCT IN CONCEALED SPACES: ALL SUPPLY AIR, EXHAUST AIR AND FRESH AIR DUCTWORK INSTALLED IN CONCEALED SPACES SHALL BE WRAPPED WITH ULC APPROVED 1 1/2" THICK 3/4 LB DENSITY FIBERGLASS FOIL FACED BLANKET WITH REINFORCED FIBERGLASS SCRIM. INSULATION SHALL BE ADHERED WITH 3" TAPE ON ALL JOINTS . DUCTS OVER 36 " SHALL BE PINED ON BOTTOM WITH 1" 12 GAUGE PINS ALL CLIPS SHALL BE COVERED WITH FOIL FACED TAPE. SAGGING OF INSULATION SHALL NOT BE ALLOWED.

2.10.3. DUCT INSULATION - EXPOSED DUCT: SUPPLY AIR, FRESH AIR AND EXHAUST AIR DUCT EXPOSED TO VIEW SHALL SHALL BE WRAPPED WITH ULC APPROVED DUCT INSULATION 1" THICK 3.5 LB DENSITY RIGID FIBERGLASS INSULATION WITH FOIL FACE REINFORCED SCRIM JACKETING. ALL EXPOSED DUCT WORK SHALL HAVE A LAYER OF 60Z UL LABELED CANVAS EMBEDDED IN A COATING OF 120-18 LAGGING ADHESIVE WITH A FINAL COAT OF LAGGING ADHESIVE TO BE LEFT READY FOR PAINTING. ALL RIGID INSULATION TO BE ADHERED WITH 12 GAUGE PINS AND CLIPS TO DUCTWORK . CLIPS TO BE COVERED WITH FOIL TAPE BEFORE CANVAS IS APPLIED.

2.10.4. DO NOT INSULATE THE FOLLOWING:
2.10.4.1. RETURN AIR DUCTWORK
2.10.4.2. DUCT WORK WITH ACOUSTIC LINING, BUT OVERLAP THE LINED DUCT BY 1 FOOT WITH THERMAL INSULATION.
2.10.4.3. SUPPLY AIR DUCTWORK IN RETURN AIR PLENUM OR EXPOSED IN THE ROOM IT SERVES

2.11. BALANCING

2.11.1. BALANCE, ADJUST AND TEST ALL AIR MOVING EQUIPMENT, AIR DISTRIBUTION, HEATING SYSTEMS, EXHAUST SYSTEMS, EXHAUST AND MAKE-UP SYSTEMS AS SPECIFIED AND AS INDICATED ON DRAWINGS TO N.E.B.B. STANDARD. BALANCING TO BE PERFORMED BY A THIRD PARTY. ALL COSTS FOR THE BALANCING SUB-CONTRACTOR TO BE CARRIED BY THE HVAC CONTRACTOR.

2.11.2. BALANCING AND TESTING SHALL NOT BEGIN UNTIL ALL SYSTEMS ARE COMPLETED AND IN FULL WORKING ORDER.

2.11.3. CHANGES IN FILTERS, DRIVES, AND DAMPERS OR THE ADDITION OF DAMPERS, CONTROL DEVICES OR GAUGES REQUIRED TO CORRECT BALANCE AS REQUIRED SHALL BE MADE AT NO ADDITIONAL COST TO OWNER.

2.11.4. ALL EQUIPMENT AND SYSTEMS SHALL BE RUN THROUGH THEIR CYCLE TO CHECK FOR CORRECT WIRING AND SEQUENCING.

2.11.5. ALL INSTRUMENTS FORMS AND PROCEDURES SHALL MEET THE REQUIREMENTS SET FORTH BY THE NATIONAL ENVIRONMENTAL BALANCING BUREAU (N.E.B.B.).

2.11.6. A COPY OF THE BALANCING REPORT SHALL BE SENT TO THE ENGINEER FOR APPROVAL.

2.12. INSTALLATION

2.12.1. EXHAUST FANS SHALL BE AT LEAST 10'-0" FROM ANY FRESH AIR INTAKE AS PER ONTARIO BUILDING CODE.

2.12.2. H.V.A.C. UNITS SHALL BE AT LEAST 6'-0" FROM ANY PLUMBING VENT AS PER CODE OR VENT END SHALL BE AT LEAST 3'-0" HIGHER THAN THE AIR INTAKE.

2.12.3. INSTALLATION TO BE IN ACCORDANCE WITH NFPA 90A "STANDARD FOR THE INSTALLATION OF AIR-CONDITIONING AND VENTILATING SYSTEMS".

2.12.4. LOCATE DIFFUSERS, GRILLES & REGISTERS TO SUIT LIGHTING AND CEILING PLAN.

2.13. VIBRATION ISOLATION

2.13.1. PROVIDE FLEXIBLE CONNECTIONS BETWEEN ALL DUCTWORK AND VIBRATING EQUIPMENT, INCLUDING FANS.

2.13.2. VIBRATION ISOLATION HANGERS AND SUPPORTS SHALL BE USED TO INSTALL ALL VIBRATING EQUIPMENT, INCLUDING FANS.

3. CONTROLS

3.1. CONTRACTOR TO SUPPLY & INSTALL CONTROL WIRING AND CONDUIT FOR EQUIPMENT WHERE REQUIRED. CONTROL WIRING SHALL BE SIZED TO HAVE NO MORE THAN 10 PERCENT VOLTAGE DROP. SUPPLY AND INSTALL FT-6 RATED WIRING WHEN THE SPACE IS OPEN AND ACCESSIBLE (IE, CEILING PLENUM WITH ACT) OTHERWISE PROVIDE EMT FOR WIRING THAT WILL BE EXPOSED AND/OR INACCESSIBLE.

3.2. CONTRACTOR TO INSTALL COMPLETE ZONED HVAC SYSTEMS INCLUDING ALL 24 V WIRING, CONTROLS, INTERLOCKS AND THERMOSTATS TO EFFECT A COMPLETE OPERATIONAL SYSTEM.

PIPING & PLUMBING NOTES

1. GENERAL

1.1. THE ENTIRE PLUMBING SYSTEM SHALL BE IN ACCORDANCE WITH THE LATEST EDITION OF THE ONTARIO BUILDING CODE, NATIONAL PLUMBING CODE, LOCAL BYLAWS AND THESE DRAWINGS. ANY DISCREPANCIES WILL BE RESOLVED WITH ENGINEER PRIOR TO PROCEEDING.

1.2. THE EXISTING PIPING INDICATED ON THESE PLANS SHALL BE VERIFIED IN THE FIELD FOR EXACT LOCATIONS, QUANTITY, AND PIPE SIZES.

1.3. THE PIPING INDICATED ON THESE PLANS ARE DIAGRAMMATIC. ALL WORK SHALL BE COORDINATED WITH ALL OTHER TRADES PRIOR TO INSTALLATION. CONTRACTOR SHALL COORDINATE ROUTING OF ALL PIPING WITH EXISTING CONDITIONS AND SHALL PROVIDE ANY NECESSARY OFFSETS, REROUTING, TEES, ELBOWS, ETC. REQUIRED FOR A COMPLETE AND COORDINATED INSTALLATION.

1.4. CONTRACTOR SHALL COORDINATE AND PROVIDE ALL NECESSARY PIPING & PLUMBING FITTINGS, PIPING, MISCELLANEOUS ITEMS REQUIRED FOR A COMPLETE INSTALLATION OF ALL PLUMBING RELATED ITEMS.

1.5. ALL PIPES, VALVES, PIPE FITTINGS AND PLUMBING FIXTURES ANTICIPATED TO CONVEY OR DISPENSE WATER FOR HUMAN CONSUMPTION THROUGH DRINKING AND COOKING SHALL HAVE NO MORE THAN A WEIGHTED AVERAGE LEAD CONTENT OF 0.25% ON WETTED SURFACES.

2. PIPING AND EQUIPMENT SUPPORT

2.1. ALL PLUMBING & PIPING SYSTEMS SHALL BE SUPPORTED AS REQUIRED BY THE CODE REQUIREMENTS AND PER MANUFACTURER'S RECOMMENDATIONS.

2.2. SUPPORT NEW PIPING FROM BUILDING STRUCTURE AND OR FRAMING IN AN APPROVED MANNER. WHERE OVERHEAD EQUIPMENT EXISTS, FURNISH ADDITIONAL FRAMING.

2.3. BELOW GRADE: EARTH SHALL BE EXCAVATED TO A MINIMUM DEPTH WITH AN EVEN SURFACE TO INSURE SOLID BEARING OF PIPE FOR ITS ENTIRE LENGTH.

2.4. INTERIOR: THE PIPE SHALL BE INSTALLED (UNLESS OTHERWISE SPECIFIED) A MINIMUM OF 4 INCHES BELOW THE BOTTOM OF THE SLAB AND SHALL NOT BE IN ANY DIRECT CONTACT WITH THE CONCRETE AT ANY POINT.

3. DOMESTIC COLD WATER AND HOT WATER PIPING

3.1. DOMESTIC HOT AND COLD PIPING - HARD DRAWN TYPE "L" COPPER, (TYPE "K" BELOW GRADE). WITH CAST BRONZE OR WROUGHT COPPER FITTINGS, SOLDER JOINT FITTINGS WITH THIRD PARTY VERIFICATION.

3.2. ALTERNATIVELY, THE CONTRACTOR MAY ELECT TO USE PEX TUBING, SUBJECT TO APPROVAL OF THE ENGINEER. HOWEVER, THE USE OF PEX TUBING WILL REQUIRE THE CONTRACTOR TO ENSURE THAT PIPE SIZES SHOWN ON DRAWINGS WILL BE INCREASED BY ONE PIPE SIZE.

3.3. VALVES - COLD AND HOT WATER, BALL VALVES, 2 INCHES AND SMALLER, 150 PSI SOLDER JOINT, FULLPORT BALL VALVES, CRANE 9322.

4. SANITARY DRAINAGE, STORM DRAINAGE AND VENT PIPING

4.1. ABS-DWV PLASTIC PIPE AND FITTINGS CERTIFIED TO CSA STANDARD B181-1 BELOW GRADE. IPEX SYSTEM 15 DWV PVC PIPE ABOVE GRADE. USE IPEX XFR IN RETURN AIR PLENUMS. PVC SHALL NOT BE USED IN VERTICAL SERVICE SPACE. SANITARY, STORM AND VENT PIPING IN VERTICAL CHASE SHALL BE CAST IRON OR COPPER PIPE, INSTALLED AS PER O.B.C., EXCEPT WHERE COPPER PIPE IS USED, JOINTS TO BE MADE WITH 95-5 SOLDER.

4.2. DRAINAGE PIPING SHALL BE RUN AS STRAIGHT AS POSSIBLE AND SHALL HAVE LONG TURN FITTINGS.

4.3. CONTRACTOR SHALL BE RESPONSIBLE FOR THE PROPER FLASHING OF THE VENT PIPING RUN THROUGH THE ROOF.

4.4. PROVIDE CLEANOUTS AT THE BASE OF ALL SANITARY DRAINAGE AND RAIN WATER CONDUCTORS. CLEANOUTS SHALL EXTEND THROUGH AND TERMINATE FLUSH WITH THE FINISHED WALL OR FLOOR.

4.5. FINAL LOCATIONS OF ALL VENT THRU ROOF PENETRATIONS (VTR'S) SHALL BE COORDINATED WITH ALL TRADES. ALL VTR'S SHALL BE A MINIMUM OF 10'-0" FROM ALL FRESH AIR INTAKE OPENINGS.

4.6. VENT PIPING IS NOT SHOWN ON DRAWING. SUPPLY AND INSTALL AS PER THE REQUIREMENTS OF THE ONTARIO BUILDING CODE.

5. INSULATION

5.1. ALL PIPES SHALL BE INSULATED WITH JOHNS MANVILLE MICRO-LOK FIBERGLASS PIPE INSULATION, 1" THICKNESS C/W ASJ. HOT AND TEMPERED WATER PIPING 1 1/2" AND LARGER TO HAVE 1 1/2" THICK INSULATION. FLAME SPREAD RATING AND SMOKE DEVELOPED CLASSIFICATION IN ACCORDANCE WITH THE ONTARIO BUILDING CODE. PVC JACKET IN SERVICE AREAS.

6. TESTING

6.1. TEST COLD & HOT WATER SYSTEMS IN ACCORDANCE WITH THE ONTARIO BUILDING CODE.

DRAWING LIST

M1.1	MECHANICAL NOTES, DRAWING LIST, KEY MAP, SITE MAP & LEGEND
M1.2	MECHANICAL SCHEDULE & DETAILS
M2.1	PROPOSED DEMOLITION HVAC PLAN
M2.2	PROPOSED HVAC PLAN
M2.3	PROPOSED ROOF PLAN
P1.1	PROPOSED DEMOLITION PLUMBING PLAN
P1.2	PROPOSED PLUMBING PLAN

SYMBOL LEGEND

— — SAN — —	SANITARY LINE
DOMESTIC COLD WATER LINE	
DOMESTIC HOT WATER LINE	
DOMESTIC HOT WATER RETURN LINE	
— — CD — —	CONDENSATE DRAIN
RLL	REFRIGERANT LQUID LINE
— — RGL — —	REFRIGERANT GAS LINE
ERV	ENERGY RECOVERY VENTILATOR
HP	HEAT PUMP
AC	INDOOR AC UNIT
BBH	BASEBOARD HEATER
	SUPPLY AIR DUCT UP
	SUPPLY AIR DUCT DOWN
	SUPPLY/RETURN AIR GRILLE
	RETURN/EXHAUST AIR DUCT UP
	RETURN/EXHAUST AIR DUCT DOWN
T	THERMOSTAT
	BALANCE DAMPER
A 12"x6" 200	DIFFUSER / GRILLE SIZE DIFFUSER TYPE AIR QUANTITY (CFM)
exx	PREFIX 'e' DENOTES EXISTING (LINE TYPES WILL APPEAR THINNER)

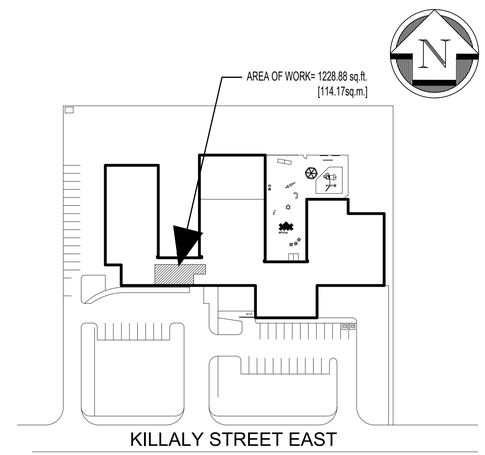

KEY MAP
SCALE: NTS

SITE MAP
SCALE: NTS

LICENSED PROFESSIONAL ENGINEER
T. A. KESZTHELYI
04 / 15 / 2024
240305
PROVINCE OF ONTARIO

Do not scale drawings. Report any discrepancies to Hallex Engineering Ltd. before proceeding.

This drawing must be signed and sealed by the Engineer prior to use in construction or submission for building permit.

All construction shall be in accordance with latest edition of the Ontario Building Code and all applicable Ontario regulations.

No part of this drawing including details, calculations or schedules may be reproduced in any form, either in part or whole, without the prior written consent of Hallex Engineering Ltd.

HALLEX ENGINEERING LTD.
745 South Service Rd. Unit 301A,
Stoney Creek, ON L8E 5Z2
Tel: 905-561-4016
4999 Victoria Ave.,
Niagara Falls, ON L2E 4C9
Tel: 905-357-4015 Fax: 905-353-1105

REV.	ISSUED FOR:	YYYY/MM/DD
0	PERMIT/TENDER	2024/04/15

CLIENT:
NIAGARA CATHOLIC DISTRICT SCHOOL BOARD
427 RICE ROAD
WELLAND, ONTARIO
L3C 7C1

PROJECT:
ST. THERESE CATHOLIC ELEMENTARY SCHOOL
530 KILLALY ST. EAST
PORT COLBORNE, ONTARIO
L3K 1P5

SHEET TITLE:
MECHANICAL NOTES, DRAWING LIST, KEY MAP, SITE MAP & LEGEND

JOB NUMBER:	240305
DATE:	MARCH 12, 2024
DRAWN BY:	JDP
DESIGNED BY:	JDP
CHECKED BY:	TK
SCALE:	AS SHOWN
DWG.	M1.0
REV.	0

ENERGY RECOVERY VENTILATOR SCHEDULE

TAG	MANUFACTURER	MODEL	AIRFLOW (CFM)	ESP (IN WG)	ELECTRICAL VOLTAGE	ELECTRICAL MCA	ELECTRICAL MOCP	DIMENSIONS WxHxD (IN)	WEIGHT (LBS)	REMARKS
ERV-1	LIFE BREATH	METRO 120ERV	119	0.5	120/1/60	1.4	15	20 3/4" x 9 3/4" x 19 3/8"	34	ENERGY RECOVERY VENTILATOR c/w 20 GAUGE PREPAINTED GALVANIZED STEEL CASE, INDEPENDENT CENTRIFUGAL BLOWER w/ MULTIPLE FAN SPEED OPERATION, WASHABLE MERV-13 AIR FILTERS & FAN DEFROST. CONTRACTOR TO PROVIDE TIMER.

DUCTLESS AIR CONDITIONING UNIT SCHEDULE

TAG	MANUFACTURER	LOCATION	MODEL	NOM. TONS	COOLING CAPACITY (MBH)	HEATING CAPACITY (MBH)	ELECTRICAL VOLTAGE	ELECTRICAL MCA	ELECTRICAL MOCP	WEIGHT (LBS)	DIMENSIONS LxWxH (IN)	REMARKS
AC-1	LG	-	LMN079HVT	0.5	0.6	8.1	208-230/1/60	0.4	15	18.3	32 13/16"x7 1/8"x12 1/8"	- INDOOR UNIT WALL MOUNT c/w CROSS FLOW FAN, BRUSHLESS DIGITALLY CONTROLLED DIRECT DRIVE MOTOR, WASHABLE PRE-FILTER, 3M MICRO DUCT SECONDARY FILTER, R410A REFRIGERANT TYPE, 4-WAY AUTO SWING, 24 OUR ON/OFF TIMER, AUTO OPERATION, AUTO RESTART, SELF CLEANING INDOOR COIL & SLEEP MOTE CONDENSATE SENSOR CONNECTION. PROVIDE LG PREMTB100 STANDARD III WIRED REMOTE CONTROLLER.
AC-2		HEALTH ROOM 102	LMN079HVT	0.5	0.6	9.1	208-230/1/60	0.4	15	18.3	32 13/16"x7 1/8"x12 1/8"	- INDOOR UNIT WALL MOUNT c/w CROSS FLOW FAN, BRUSHLESS DIGITALLY CONTROLLED DIRECT DRIVE MOTOR, WASHABLE PRE-FILTER, 3M MICRO DUCT SECONDARY FILTER, R410A REFRIGERANT TYPE, 4-WAY AUTO SWING, 24 OUR ON/OFF TIMER, AUTO OPERATION, AUTO RESTART, SELF CLEANING INDOOR COIL & SLEEP MOTE CONDENSATE SENSOR CONNECTION. PROVIDE LG PREMTB100 STANDARD III WIRED REMOTE CONTROLLER.
AC-3		PRINCIPAL'S OFFICE 101A	LMN079HVT	0.5	0.6	10.1	208-230/1/60	0.4	15	18.3	32 13/16"x7 1/8"x12 1/8"	- INDOOR UNIT WALL MOUNT c/w CROSS FLOW FAN, BRUSHLESS DIGITALLY CONTROLLED DIRECT DRIVE MOTOR, WASHABLE PRE-FILTER, 3M MICRO DUCT SECONDARY FILTER, R410A REFRIGERANT TYPE, 4-WAY AUTO SWING, 24 OUR ON/OFF TIMER, AUTO OPERATION, AUTO RESTART, SELF CLEANING INDOOR COIL & SLEEP MOTE CONDENSATE SENSOR CONNECTION. PROVIDE LG PREMTB100 STANDARD III WIRED REMOTE CONTROLLER.
AC-4		RECEPTION 101	LSN120HSV5	1	12	13.6	208-230/1/60	0.4	15	18.3	32 13/16"x7 1/8"x12 1/8"	- INDOOR UNIT WALL MOUNT c/w CROSS FLOW FAN, BRUSHLESS DIGITALLY CONTROLLED DIRECT DRIVE MOTOR, WASHABLE PRE-FILTER, 3M MICRO DUCT SECONDARY FILTER, R410A REFRIGERANT TYPE, 4-WAY AUTO SWING, 24 OUR ON/OFF TIMER, AUTO OPERATION, AUTO RESTART, SELF CLEANING INDOOR COIL & SLEEP MOTE CONDENSATE SENSOR CONNECTION. PROVIDE LG PREMTB100 STANDARD III WIRED REMOTE CONTROLLER.
HP-1		ROOF	LMU303HV	2.5	30	32	208-230/1/60	18.4	25	138.9	37 13/16"x15 3/16"x32 5/16"	- OUTDOOR HEAT PUMP UNIT c/w TWIN ROTARY TYPE COMPRESSOR, PROPELLER FAN, BRUSHLESS DIGITALLY CONTROLLED DIRECT DRIVE MOTOR, AUTO OPERATION, AUTO RESTART, INVERTER (VARIABLE SPEED COMPRESSOR), DEFROST/DEICING, RESTART DELAY, SELF DIAGNOSIS, SOFT START & LOW AMBIENT COOLING. PROVIDE LOW AMBIENT WIND BAFFLE KIT & STAND.

AIR DISTRIBUTION SCHEDULE

TAG	MANUFACTURER	MODEL	DESCRIPTION
A	PRICE	510 / (UNIT SIZE) / (COLOUR)	LOUVERED SUPPLY AIR GRILLE c/w STEEL CONSTRUCTION, 3/4" BLADE SPACING, 45° DOUBLE DEFLECTION & SUITABLE FOR DUCT MOUNTING. COLOUR SELECTION BY ARCHITECT.
B	PRICE	510Z / (UNIT SIZE) / (COLOUR)	LOUVERED RETURN AIR GRILLE c/w STEEL CONSTRUCTION, 3/4" BLADE SPACING, 0° DOUBLE DEFLECTION & SUITABLE FOR DUCT MOUNTING. COLOUR SELECTION BY ARCHITECT.

MECHANICAL / ELECTRICAL COORDINATION SCHEDULE

DEVICE DETAILS			ELECTRICAL CHARACTERISTICS							F/A SHUTDOWN (BY DIV. 16.)	REMOTE CONTROL (THIS COLUMN REFERS TO INTERLOCKING ONLY. NOT THE EQUIPMENT ITSELF)									NOTES
TAG	DESCRIPTION	LOCATION	HORSEPOWER	KW	FULL LOAD AMPS	MINIMUM CIRCUIT AMPS	VOLTAGE	PHASE	ISOLATING DEVICE	EQUIPMENT TO SHUTDOWN	THERMOSTAT	R/A THERMOSTAT	BMS	SWITCH	SENSOR	TIMER	INTERLOCKED WITH	CONTROL INTERLOCKED BY	CONTROL SUPPLIED BY	CONTROL INSTALLED BY	LEGEND: E = ELECTRICAL CONTRACTOR M = MECHANICAL CONTRACTOR O = OTHER
ERV-1	ENERGY RECOVERY VENTILATOR	CORRIDOR (1.02)					120	1	PANEL A							X		M	M	M	LOW VOLTAGE CONNECTIONS BY DIV. 23. HIGH VOLTAGE CONNECTIONS BY DIV. 26.
AC-1	INDOOR AC UNIT				0.40		208	1	PANEL A		X						HP-1	M	M	M	LOW VOLTAGE CONNECTIONS BY DIV. 23. HIGH VOLTAGE CONNECTIONS BY DIV. 26. INTERLOCKED w/ TIMER FOR ON/OFF OPERATION.
AC-2	INDOOR AC UNIT	HEALTH ROOM (102)			0.40		208	1	PANEL A		X						HP-1	M	M	M	LOW VOLTAGE CONNECTIONS BY DIV. 23. HIGH VOLTAGE CONNECTIONS BY DIV. 26.
AC-3	INDOOR AC UNIT	PRINCIPAL'S OFFICE (101A)			0.40		208	1	PANEL A		X						HP-1	M	M	M	LOW VOLTAGE CONNECTIONS BY DIV. 23. HIGH VOLTAGE CONNECTIONS BY DIV. 26.
AC-4	INDOOR AC UNIT	RECEPTION (101)			0.40		208	1	PANEL A		X						HP-1	M	M	M	LOW VOLTAGE CONNECTIONS BY DIV. 23. HIGH VOLTAGE CONNECTIONS BY DIV. 26.
HP-1	HEAT PUMP	ROOF (SEE PLAN)				18.4	208	1	PANEL A								AC-1, AC-2, AC-3 & AC-4	M	M	M	LOW VOLTAGE CONNECTIONS BY DIV. 23. HIGH VOLTAGE CONNECTIONS BY DIV. 26.

NOTE:
OVERSIZED PIPE HANGERS REQUIRED ONLY FOR PIPE SIZES 2" AND GREATER.

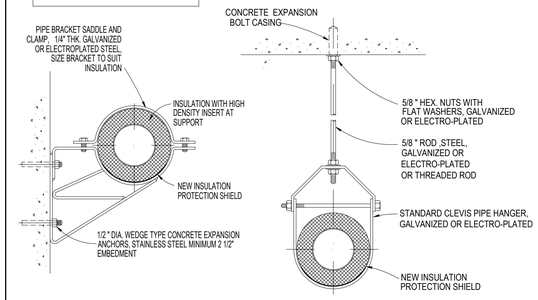

1 / M1.2 TYP. PIPE SUPPORT DETAILS
SCALE: N.T.S.

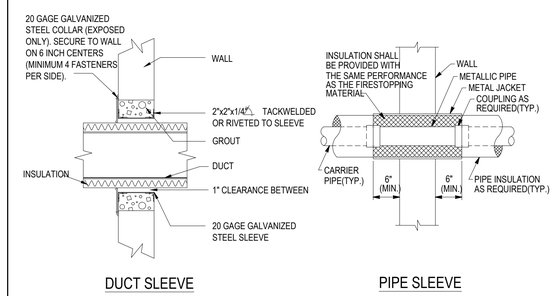

DUCT SLEEVE PIPE SLEEVE

2 / M1.2 DUCT & PIPE SLEEVE
SCALE: N.T.S.

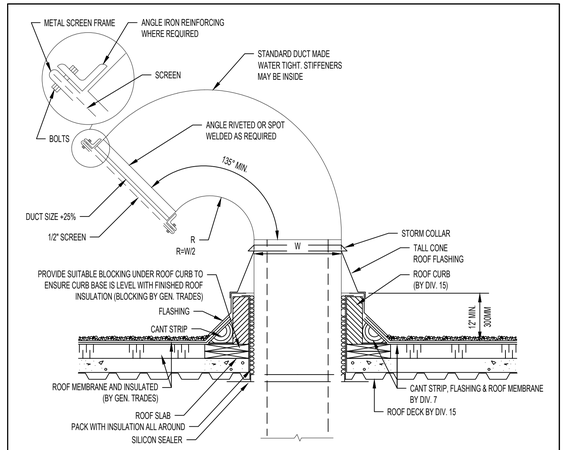

3 / M1.2 TYP. GOOSENECK OUTLET DUCT
SCALE: NTS

LICENSED PROFESSIONAL ENGINEER
T. A. KESZTHELYI
04 / 15 / 2024
240305
PROVINCE OF ONTARIO

Do not scale drawings. Report any discrepancies to Hallex Engineering Ltd. before proceeding.

This drawing must be signed and sealed by the Engineer prior to use in construction or submission for building permit.

All construction shall be in accordance with latest edition of the Ontario Building Code and all applicable Ontario regulations.

No part of this drawing including details, calculations or schedules may be reproduced in any form, either in part or whole, without the prior written consent of Hallex Engineering Ltd.

HALLEX ENGINEERING LTD.
745 South Service Rd. Unit 301A, Stoney Creek, ON L8E 5Z2 Tel: 905-561-4016
4999 Victoria Ave., Niagara Falls, ON L2E 4C9 Tel: 905-357-4015 Fax: 905-353-1105

REV.	ISSUED FOR:	YYYY/MM/DD
0	PERMIT/TENDER	2024/04/15

CLIENT:
NIAGARA CATHOLIC DISTRICT SCHOOL BOARD
427 RICE ROAD
WELLAND, ONTARIO
L3C 7C1

PROJECT:
ST. THERESE CATHOLIC ELEMENTARY SCHOOL
530 KILLALY ST. EAST
PORT COLBORNE, ONTARIO
L3K 1P5

SHEET TITLE:
MECHANICAL SCHEDULES & DETAILS

JOB NUMBER:	240305
DATE:	MARCH 12, 2024
DRAWN BY:	JDP
DESIGNED BY:	JDP
CHECKED BY:	TK
SCALE:	AS SHOWN
DWG.	M1.1
REV.	0

GENERAL DEMOLITION NOTES:

1. DEMOLITION SHALL BE CARRIED OUT SO THAT THE WORK WILL NOT INTERFERE WITH THE OWNER'S BUSINESS OPERATIONS.
2. LIMIT ACCESS BY CONSTRUCTION PERSONNEL TO ONLY THOSE AREAS REQUIRED FOR NEW WORK OR TO ACCESS NEW WORK. MAKE GOOD ALL EXISTING SURFACES DISTURBED BY NEW WORK.
3. LIMIT REMOVAL OF ITEMS TO SMALLEST AREA POSSIBLE AND MAKE GOOD ALL EXISTING SURFACES DISTURBED BY NEW WORK.
4. TAKE ALL PRECAUTIONS NECESSARY TO PROTECT THE EXISTING STRUCTURE, ETC. NOT PART OF THE DEMOLITION WORK. PROVIDE AND PLACE BRACING OR SHORING AS REQUIRED. BE RESPONSIBLE FOR SAFETY AND SUPPORT ALL PARTS OF THE BUILDING STRUCTURE, UTILITIES OR PARTS OF SUCH BUILDING OR STRUCTURE AND BE LIABLE FOR ANY MOVEMENT, SETTLEMENT, DAMAGE OR INJURY.
5. ALL WASTE MATERIALS SHALL BE REMOVED FROM SITE AND DISPOSED OF, UNLESS OTHERWISE SPECIFIED BY THE OWNER.
6. PATCH AND MAKE GOOD ALL SURFACES WHERE DEMOLITION, REMOVAL OR ALTERATIONS OCCUR. SURFACES TO BE FINISHED FLUSH WITH ADJACENT PLANES. TEXTURE AND PAINT TO MATCH EXISTING ADJACENT SURFACES.
7. ALL DEMOLITION WORK TO BE CARRIED OUT WITH RESPECT TO CANADIAN SAFETY RULES.

SPECIFIC DEMOLITION NOTES:

1. EXISTING EXHAUST FAN REMOVED BY ELECTRICAL CONTRACTOR. MECHANICAL CONTRACTOR TO CAP EXHAUST FAN DUCT IN CEILING.
2. CONTRACTOR TO REMOVE EXISTING EXHAUST FAN & ASSOCIATED DUCTWORK UP TO ROOF LEVEL. PATCH & REPAIR ROOF PENETRATIONS. PATCHED ROOF TO MATCH EXISTING ROOF CONSTRUCTION.
3. CONTRACTOR TO REMOVE EXISTING BASEBOARD HEATER.
4. CONTRACTOR TO REMOVE EXISTING WALL HEATER (eWH) CASING & TURN OVER TO THE GENERAL CONTRACTOR FOR CLEANING & PAINTING.

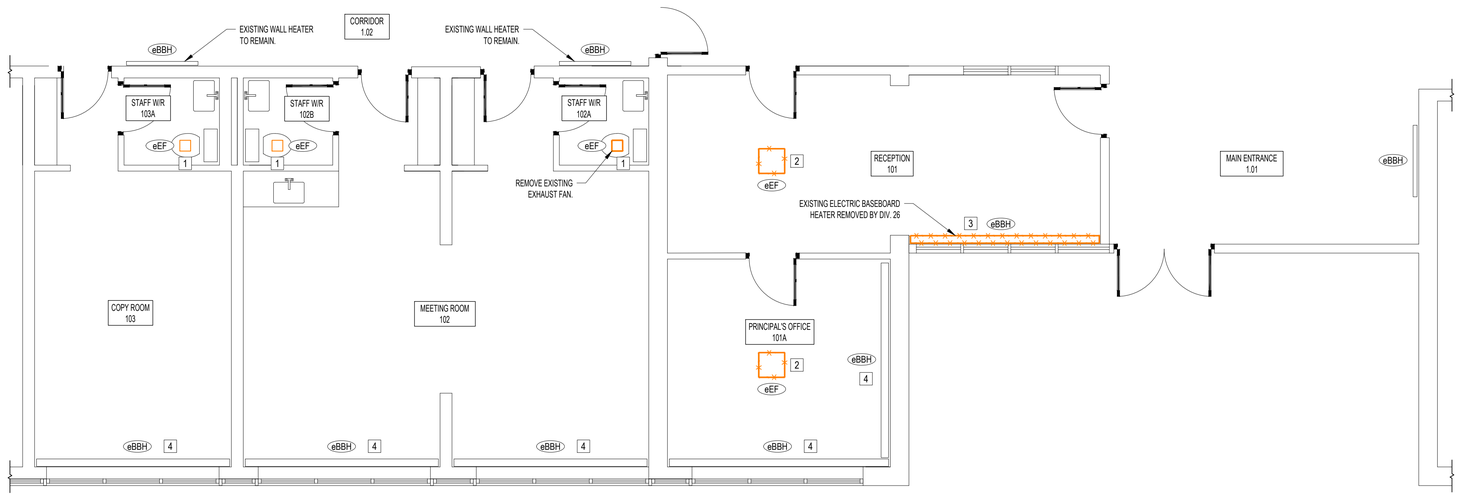

PROPOSED DEMOLITION HVAC PLAN

SCALE: 1/4" = 1'-0"

LICENSED PROFESSIONAL ENGINEER
T. A. KESZTHELYI
04 / 15 / 2024
240305
PROVINCE OF ONTARIO

Do not scale drawings. Report any discrepancies to Hallex Engineering Ltd. before proceeding.

This drawing must be signed and sealed by the Engineer prior to use in construction or submission for building permit.

All construction shall be in accordance with latest edition of the Ontario Building Code and all applicable Ontario regulations.

No part of this drawing including details, calculations or schedules may be reproduced in any form, either in part or whole, without the prior written consent of Hallex Engineering Ltd.

HALLEX ENGINEERING LTD.
745 South Service Rd. Unit 301A,
Stoney Creek, ON L8E 5Z2
Tel: 905-561-4016
4999 Victoria Ave.,
Niagara Falls, ON L2E 4C9
Tel: 905-357-4015 Fax: 905-353-1105

REV.	ISSUED FOR:	YYYY/MM/DD
0	PERMIT/TENDER	2024/04/15

CLIENT:
NIAGARA CATHOLIC DISTRICT SCHOOL BOARD
427 RICE ROAD
WELLAND, ONTARIO
L3C 7C1

PROJECT:
ST. THERESE CATHOLIC ELEMENTARY SCHOOL
530 KILLALY ST. EAST
PORT COLBORNE, ONTARIO
L3K 1P5

SHEET TITLE:
PROPOSED DEMOLITION HVAC PLAN

JOB NUMBER:	240305
DATE:	MARCH 12, 2024
DRAWN BY:	JDP
DESIGNED BY:	JDP
CHECKED BY:	TK
SCALE:	AS SHOWN
DWG.	M2.1
REV.	0

GENERAL HVAC NOTES:

1. CONTRACTOR SHALL PROVIDE FIRE DAMPERS IN ALL NEW DUCTWORK AT ALL DUCT PENETRATIONS OF FIRE SEPARATIONS, INCLUDING LOCATIONS NOT SPECIFICALLY INDICATED ON THESE DRAWINGS. REFER TO ARCHITECTURAL DRAWINGS FOR FIRE SEPARATION LOCATIONS AND RATINGS.
2. ALL LOW VOLTAGE WIRING IN CONDUIT AHLL BE BY DIV 15.
3. THIS DRAWING IS DIAGRAMMATIC AND APPROXIMATE AND IS SUBJECT TO REARRANGEMENT FOR PROPER INSTALLATION. THEY ARE NOT INTENDED TO SHOW EVERY ITEM IN ITS EXACT LOCATION, THE EXACT DIMENSIONS, OR ALL THE DETAILS OF THE EQUIPMENT. CERTAIN RUNS OF DUCTWORK AND PIPING SHOWN DISTORTED TO AVOID CONFUSION. COORDINATE ALL WORK WITH ALL OTHER TRADES PRIOR TO INSTALLATION.
4. DUCT CONSTRUCTION SHALL COMPLY WITH SMACNA STANDARDS.
5. CONTRACTOR TO COORDINATE WITH EQUIPMENT SUPPLIERS PRIOR TO INSTALLATION OF MECHANICAL SERVICES TO EQUIPMENT SUPPLIED BY OTHERS.
6. ALL EXHAUST TERMINATIONS TO BE A MINIMUM OF 10 FEET AWAY (ANY DIRECTION) FROM ANY MECHANICAL AIR INTAKE. ALL FLUE VENT TERMINATIONS FROM ANY GAS FIRED EQUIPMENT TO BE A MINIMUM OF 6 FEET AWAY (ANY DIRECTION) FROM ANY MECHANICAL AIR INTAKE.

SPECIFIC HVAC NOTES:

1. REFRIGERANT LINES FROM HP-1 ON ROOF TO AC-1, AC-2, AC-3 & AC-4.
2. ERV FRESH AIR INTAKE FROM ROOF LEVEL. PROVIDE GOOSENECK TERMINATION.
3. ERV EXHAUST AIR OUTLET TO ROOF LEVEL. PROVIDE GOOSENECK TERMINATION.
4. NEW ENERGY RECOVERY VENTILATOR (ERV-1) TO BE INSTALLED ABOVE CEILING LEVEL IN CORRIDOR.
5. CONTRACTOR TO CLEAN EXISTING WALL HEATER (eWH) FINS & PIPING & REINSTALL eWH CASING.

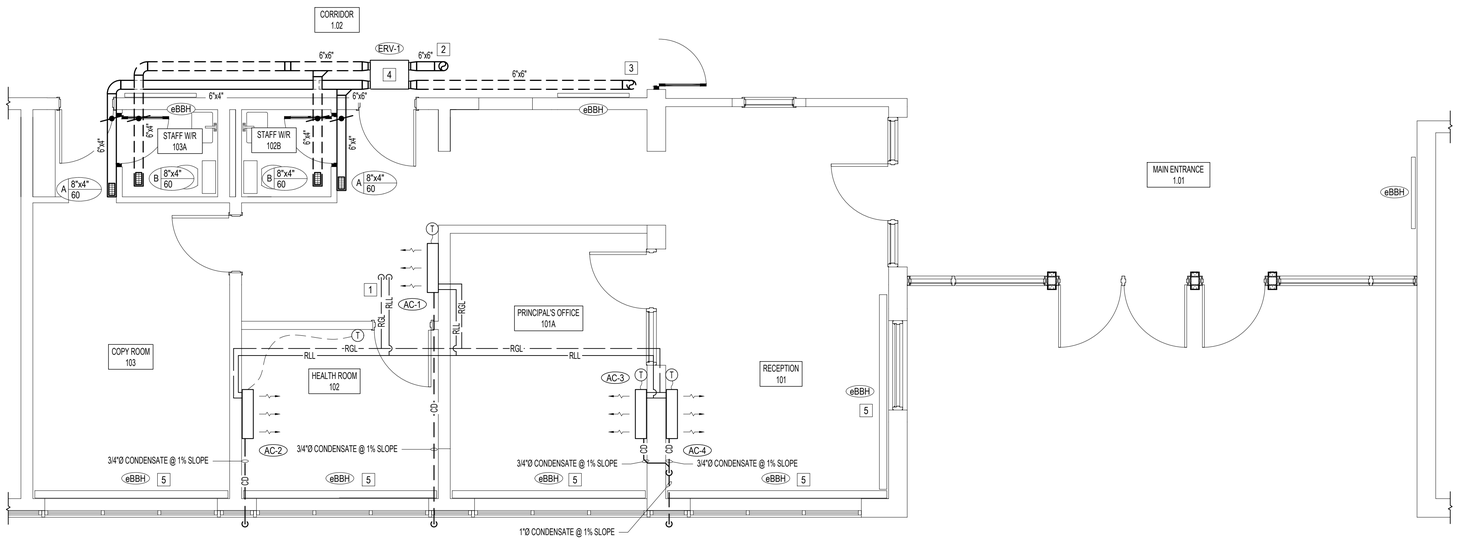

PROPOSED HVAC PLAN

SCALE: 1/4" = 1'-0"

LICENSED PROFESSIONAL ENGINEER
T. A. KESZTHELYI
04 / 15 / 2024
240305
PROVINCE OF ONTARIO

N

Do not scale drawings. Report any discrepancies to Hallex Engineering Ltd. before proceeding.

This drawing must be signed and sealed by the Engineer prior to use in construction or submission for building permit.

All construction shall be in accordance with latest edition of the Ontario Building Code and all applicable Ontario regulations.

No part of this drawing including details, calculations or schedules may be reproduced in any form, either in part or whole, without the prior written consent of Hallex Engineering Ltd.

HALLEX ENGINEERING LTD.
745 South Service Rd. Unit 301A,
Stoney Creek, ON L8E 5Z2
Tel: 905-561-4016
4399 Victoria Ave.,
Niagara Falls, ON L2E 4C9
Tel: 905-357-4015 Fax: 905-353-1105

REV.	ISSUED FOR:	YYYY/MM/DD
0	PERMIT/TENDER	2024/04/15

CLIENT:
NIAGARA CATHOLIC DISTRICT SCHOOL BOARD
427 RICE ROAD
WELLAND, ONTARIO
L3C 7C1

PROJECT:
ST. THERESE CATHOLIC ELEMENTARY SCHOOL
530 KILLALY ST. EAST
PORT COLBORNE, ONTARIO
L3K 1P5

SHEET TITLE:
PROPOSED HVAC PLAN

JOB NUMBER:	240305
DATE:	MARCH 12, 2024
DRAWN BY:	JDP
DESIGNED BY:	JDP
CHECKED BY:	TK
SCALE:	AS SHOWN
DWG.	M2.2
REV.	0

GENERAL MECHANICAL NOTES:

1. CONTRACTOR SHALL PROVIDE FIRE DAMPERS IN ALL NEW DUCTWORK AT ALL DUCT PENETRATIONS OF FIRE SEPARATIONS, INCLUDING LOCATIONS NOT SPECIFICALLY INDICATED ON THESE DRAWINGS. REFER TO ARCHITECTURAL DRAWINGS FOR FIRE SEPARATION LOCATIONS AND RATINGS.
2. ALL LOW VOLTAGE WIRING IN CONDUIT SHALL BE BY DIV 15.
3. THIS DRAWING IS DIAGRAMMATIC AND APPROXIMATE AND IS SUBJECT TO REARRANGEMENT FOR PROPER INSTALLATION. THEY ARE NOT INTENDED TO SHOW EVERY ITEM IN ITS EXACT LOCATION, THE EXACT DIMENSIONS, OR ALL THE DETAILS OF THE EQUIPMENT. CERTAIN RUNS OF DUCTWORK AND PIPING SHOWN DISTORTED TO AVOID CONFUSION. COORDINATE ALL WORK WITH ALL OTHER TRADES PRIOR TO INSTALLATION.
4. DUCT CONSTRUCTION SHALL COMPLY WITH SMACNA STANDARDS.
5. CONTRACTOR TO COORDINATE WITH EQUIPMENT SUPPLIERS PRIOR TO INSTALLATION OF MECHANICAL SERVICES TO EQUIPMENT SUPPLIED BY OTHERS.
6. ALL EXHAUST TERMINATIONS TO BE A MINIMUM OF 10 FEET AWAY (ANY DIRECTION) FROM ANY MECHANICAL AIR INTAKE. ALL FLUE VENT TERMINATIONS FROM ANY GAS FIRED EQUIPMENT TO BE A MINIMUM OF 6 FEET AWAY (ANY DIRECTION) FROM ANY MECHANICAL AIR INTAKE.

SPECIFIC MECHANICAL NOTES:

1 REGRIGERANT LINES FROM GP-1 TO AC-1 & AC-2 AT FIRST FLOOR.

2 FRESH AIR INTAKE FOR ERV-1. TO BE MIN. 10' AWAY FROM ANY EXHAUST.

3 EXHAUST AIR FROM ERV-1

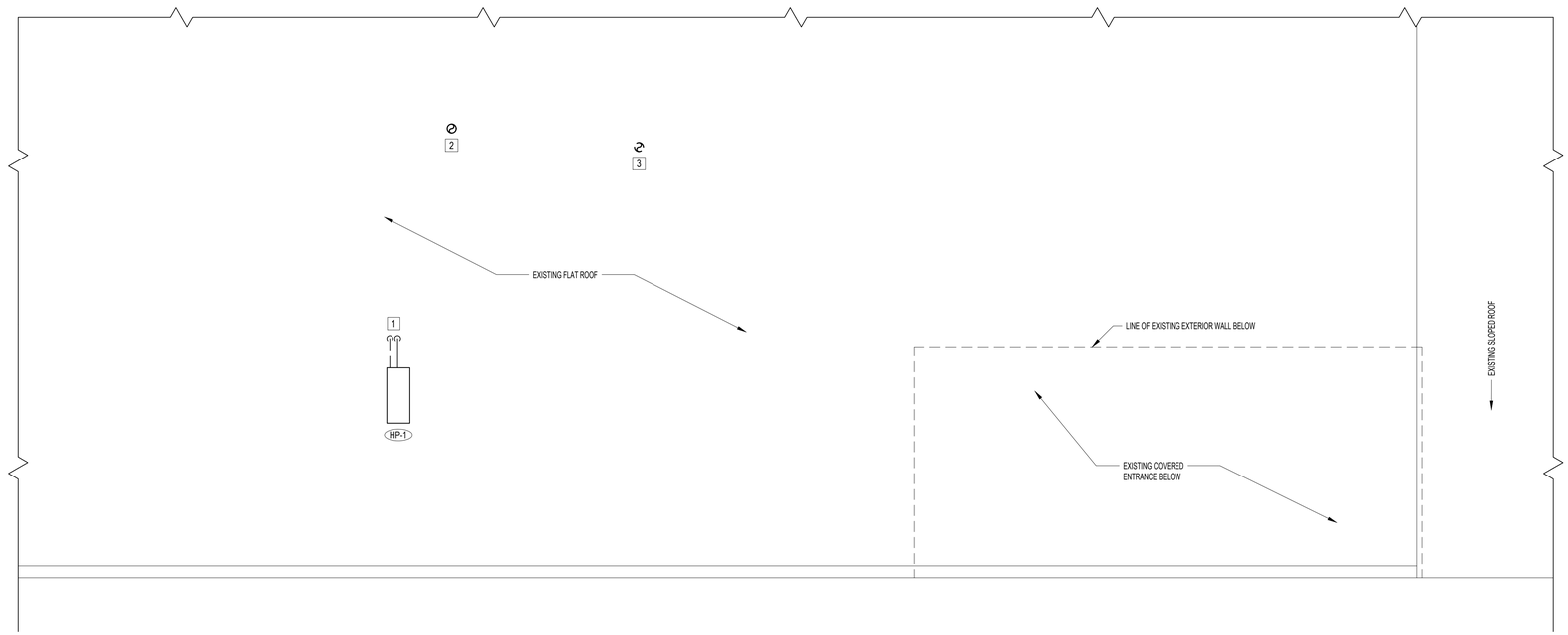

PROPOSED HVAC ROOF PLAN

SCALE: 1/4" = 1'-0"

LICENSED PROFESSIONAL ENGINEER
T. A. KESZTHELYI
04 / 15 / 2024
240305
PROVINCE OF ONTARIO

N

Do not scale drawings. Report any discrepancies to Hallex Engineering Ltd. before proceeding.

This drawing must be signed and sealed by the Engineer prior to use in construction or submission for building permit.

All construction shall be in accordance with latest edition of the Ontario Building Code and all applicable Ontario regulations.

No part of this drawing including details, calculations or schedules may be reproduced in any form, either in part or whole, without the prior written consent of Hallex Engineering Ltd.

HALLEX ENGINEERING LTD.
745 South Service Rd. Unit 301A,
Stoney Creek, ON L8E 5Z2
Tel: 905-561-4016
4999 Victoria Ave.,
Niagara Falls, ON L2E 4C9
Tel: 905-357-4015 Fax: 905-353-1105

REV.	ISSUED FOR:	YYYY/MM/DD
0	PERMIT/TENDER	2024/04/15

CLIENT:
NIAGARA CATHOLIC DISTRICT
SCHOOL BOARD
427 RICE ROAD
WELLAND, ONTARIO
L3C 7C1

PROJECT:
ST. THERESE CATHOLIC
ELEMENTARY SCHOOL
530 KILLALY ST. EAST
PORT COLBORNE, ONTARIO
L3K 1P5

SHEET TITLE:
PROPOSED HVAC
ROOF PLAN

JOB NUMBER:	240305
DATE:	MARCH 12, 2024
DRAWN BY:	JDP
DESIGNED BY:	JDP
CHECKED BY:	TK
SCALE:	AS SHOWN
DWG.	M2.3
REV.	0

GENERAL DEMOLITION NOTES:

1. DEMOLITION SHALL BE CARRIED OUT SO THAT THE WORK WILL NOT INTERFERE WITH THE OWNER'S BUSINESS OPERATIONS.
2. LIMIT ACCESS BY CONSTRUCTION PERSONNEL TO ONLY THOSE AREAS REQUIRED FOR NEW WORK OR TO ACCESS NEW WORK. MAKE GOOD ALL EXISTING SURFACES DISTURBED BY NEW WORK.
3. LIMIT REMOVAL OF ITEMS TO SMALLEST AREA POSSIBLE AND MAKE GOOD ALL EXISTING SURFACES DISTURBED BY NEW WORK.
4. TAKE ALL PRECAUTIONS NECESSARY TO PROTECT THE EXISTING STRUCTURE, ETC. NOT PART OF THE DEMOLITION WORK. PROVIDE AND PLACE BRACING OR SHORING AS REQUIRED. BE RESPONSIBLE FOR SAFETY AND SUPPORT ALL PARTS OF THE BUILDING STRUCTURE, UTILITIES OR PARTS OF SUCH BUILDING OR STRUCTURE AND BE LIABLE FOR ANY MOVEMENT, SETTLEMENT, DAMAGE OR INJURY.
5. ALL WASTE MATERIALS SHALL BE REMOVED FROM SITE AND DISPOSED OF, UNLESS OTHERWISE SPECIFIED BY THE OWNER.
6. PATCH AND MAKE GOOD ALL SURFACES WHERE DEMOLITION, REMOVAL OR ALTERATIONS OCCUR. SURFACES TO BE FINISHED FLUSH WITH ADJACENT PLANES. TEXTURE AND PAINT TO MATCH EXISTING ADJACENT SURFACES.
7. ALL DEMOLITION WORK TO BE CARRIED OUT WITH RESPECT TO CANADIAN SAFETY RULES.

SPECIFIC DEMOLITION NOTES:

1. REMOVE EXISTING SINK & COUNTER, CAP DCW & DHW LINES IN WALL. CAP EXISTING SANITARY IN WALL OR BELOW FLOOR, MAKE GOOD FLOOR LEVEL AND SURFACE.
2. REMOVE EXISTING SINK, CAP DCW & DHW LINES IN WALL. CAP EXISTING SANITARY IN WALL OR BELOW FLOOR, MAKE GOOD FLOOR LEVEL AND SURFACE.
3. REMOVE EXISTING TOILET, CAP DCW LINE IN WALL. CAP EXISTING SANITARY BELOW FLOOR, MAKE GOOD FLOOR LEVEL AND SURFACE.

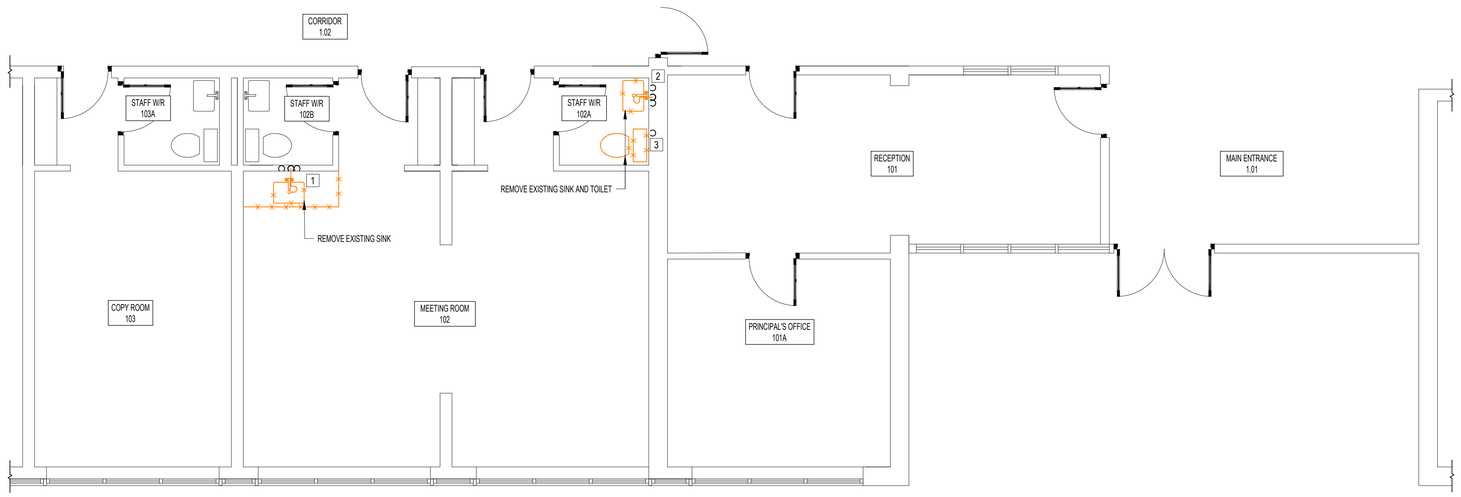

PROPOSED DEMOLITION PLUMBING PLAN

SCALE: 1/4" = 1'-0"

LICENSED PROFESSIONAL ENGINEER
T. A. KESZTHELYI
04 / 15 / 2024
240305
PROVINCE OF ONTARIO

N

Do not scale drawings. Report any discrepancies to Hallex Engineering Ltd. before proceeding.

This drawing must be signed and sealed by the Engineer prior to use in construction or submission for building permit.

All construction shall be in accordance with latest edition of the Ontario Building Code and all applicable Ontario regulations.

No part of this drawing including details, calculations or schedules may be reproduced in any form, either in part or whole, without the prior written consent of Hallex Engineering Ltd.

HALLEX ENGINEERING LTD.
745 South Service Rd. Unit 301A,
Stoney Creek, ON L8E 5Z2
Tel: 905-561-4016
4999 Victoria Ave.,
Niagara Falls, ON L2E 4C9
Tel: 905-357-4015 Fax: 905-353-1105

REV.	ISSUED FOR:	YYYY/MM/DD
0	PERMIT/TENDER	2024/04/15

CLIENT:
NIAGARA CATHOLIC DISTRICT SCHOOL BOARD
427 RICE ROAD
WELLAND, ONTARIO
L3C 7C1

PROJECT:
ST. THERESE CATHOLIC ELEMENTARY SCHOOL
530 KILLALY ST. EAST
PORT COLBORNE, ONTARIO
L3K 1P5

SHEET TITLE:
PROPOSED DEMOLITION PLUMBING PLAN

JOB NUMBER:	240305
DATE:	MARCH 12, 2024
DRAWN BY:	JDP
DESIGNED BY:	JDP
CHECKED BY:	TK
SCALE:	AS SHOWN
DWG.	P1.1
REV.	0

GENERAL PLUMBING NOTES:

1. SITE VERIFY ALL EXISTING PIPING LOCATIONS AND SIZES BEFORE PROCEEDING. REPORT ANY DISCREPANCIES TO ENGINEER.
2. CONTRACTOR SHALL PROVIDE FIRE STOPPING OF ALL NEW PLUMBING AT ALL PENETRATIONS OF FIRE SEPARATIONS, INCLUDING LOCATIONS NOT SPECIFICALLY INDICATED ON THESE DRAWINGS. REFER TO ARCHITECTURAL DRAWINGS FOR FIRE SEPARATION LOCATIONS AND RATINGS.
3. VENTING FOR SANITARY SYSTEM (NOT SHOWN ON DRAWING) SHALL BE FIELD-RUN BY CONTRACTOR IN ACCORDANCE WITH ONTARIO BUILDING CODE REQUIREMENTS. CONTRACTOR SHALL ENSURE ALL VENT PENETRATIONS THROUGH ROOF ARE PROPERLY FLASHED AND WATERPROOFED.
4. THIS DRAWING IS DIAGRAMMATIC AND APPROXIMATE AND IS SUBJECT TO REARRANGEMENT FOR PROPER INSTALLATION. THEY ARE NOT INTENDED TO SHOW EVERY ITEM IN ITS EXACT LOCATION, THE EXACT DIMENSIONS, OR ALL THE DETAILS OF THE EQUIPMENT. CERTAIN RUNS OF PIPING SHOWN DISTORTED TO AVOID CONFUSION. COORDINATE ALL WORK WITH ALL OTHER TRADES PRIOR TO INSTALLATION.
5. MECHANICAL CONTRACTOR TO COORDINATE WITH GENERAL CONTRACTOR AND ALL EQUIPMENT SUPPLIERS PRIOR TO INSTALLATION OF MECHANICAL SERVICES TO EQUIPMENT SUPPLIED BY OTHERS.
6. ALL DOMESTIC HOT, COLD AND RECIRC. WATER PIPING TO BE INSTALLED AT THE HIGHEST LEVEL. (TYPICAL)

SPECIFIC PLUMBING NOTES:

1. TIE NEW SANITARY INTO EXISTING, CONTRACTOR TO ENSURE EXISTING SANITARY INVERT IS ADEQUATE TO RECEIVE LATERAL SLOPES AND SUITABLE FOR CONNECTION. MAKE GOOD FLOOR SURFACE WITH MATERIAL IN KIND.
2. TIE NEW 1/2"Ø DCW & DHW INTO EXISTING AND RUN ABOVE CEILING AND DOWN WALL TO NEW SINK.

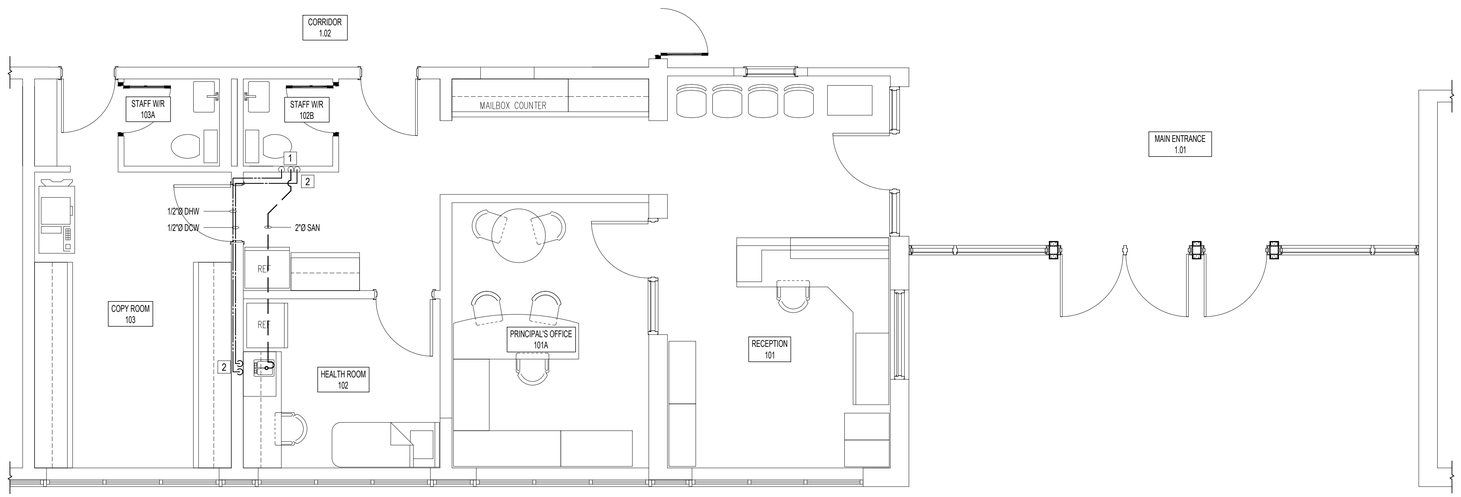

PROPOSED PLUMBING PLAN

SCALE: 1/4" = 1'-0"

LICENSED PROFESSIONAL ENGINEER
T. A. KESZTHELYI
04 / 15 / 2024
240305
PROVINCE OF ONTARIO

N

Do not scale drawings. Report any discrepancies to Hallex Engineering Ltd. before proceeding.

This drawing must be signed and sealed by the Engineer prior to use in construction or submission for building permit.

All construction shall be in accordance with latest edition of the Ontario Building Code and all applicable Ontario regulations.

No part of this drawing including details, calculations or schedules may be reproduced in any form, either in part or whole, without the prior written consent of Hallex Engineering Ltd.

HALLEX ENGINEERING LTD.
745 South Service Rd. Unit 301A,
Stoney Creek, ON L8E 5Z2
Tel: 905-561-4016
4999 Victoria Ave.,
Niagara Falls, ON L2E 4C9
Tel: 905-357-4015 Fax: 905-353-1105

REV.	ISSUED FOR:	YYYY/MM/DD
0	PERMIT/TENDER	2024/04/15

CLIENT:
NIAGARA CATHOLIC DISTRICT SCHOOL BOARD
427 RICE ROAD
WELLAND, ONTARIO
L3C 7C1

PROJECT:
ST. THERESE CATHOLIC ELEMENTARY SCHOOL
530 KILLALY ST. EAST
PORT COLBORNE, ONTARIO
L3K 1P5

SHEET TITLE:
PROPOSED PLUMBING PLAN

JOB NUMBER:	240305
DATE:	MARCH 12, 2024
DRAWN BY:	JDP
DESIGNED BY:	JDP
CHECKED BY:	TK
SCALE:	AS SHOWN
DWG.	P1.2
REV.	0

1. GENERAL

1.1. CONTRACTOR IS RESPONSIBLE FOR READING AND UNDERSTANDING ALL NOTES SHOWN ON ALL DRAWINGS.

1.2. ANY QUESTIONS WHICH ARISE DURING / AFTER READING THE NOTES ON THE DRAWINGS ARE TO BE SUBMITTED TO THE ENGINEER FOR CLARIFICATION BEFORE TENDER SUBMISSION OR WORK BEGINS.

1.3. ANY ADDITIONAL MATERIAL / LABOR COSTS RESULTING FROM A FAILURE TO COMPLY WITH NOTES 1.1 & 1.2 ABOVE WILL REMAIN THE RESPONSIBILITY OF THE CONTRACTOR. AT TIME OF BID, FOR ANY DISCREPANCIES ON THE PLANS THIS CONTRACTOR SHALL PRESUME THAT THE ITEM WITH HIGHER COST SHALL BE PROVIDED.

1.4. CONTRACTOR SHALL FIELD VERIFY ALL DIMENSIONS AND EXISTING CONDITIONS PRIOR TO PROCEEDING WITH ANY WORK. WHERE DISCREPANCIES OCCUR BETWEEN THESE DOCUMENTS AND EXISTING CONDITIONS, THE DISCREPANCY SHALL BE REPORTED TO THE OWNER AND/OR ENGINEER FOR EXPEDITING AND RESOLVE.

1.5. ALL EQUIPMENT AND MATERIALS SHALL BE AS SPECIFIED OR "APPROVED EQUAL" BY ENGINEER OR ARCHITECT.

1.6. INSTALL WORK SO AS TO BE READILY ACCESSIBLE FOR OPERATION, MAINTENANCE AND REPAIR, MINOR DEVIATIONS FROM DRAWINGS MAY BE MADE TO ACCOMPLISH THIS, BUT CHANGES WHICH INVOLVE EXTRA COST SHALL NOT BE MADE WITHOUT APPROVAL.

1.7. PROVIDE ALL NECESSARY FLASHING AND COUNTER FLASHING TO MAINTAIN THE WATERPROOFING INTEGRITY OF THIS BUILDING AS REQUIRED BY THE INSTALLATION OF PIPES, DUCTS, CONDUIT AND EQUIPMENT.

1.8. WHERE COMPLETION OF THE WORK REQUIRES COORDINATION WITH OTHER TRADES, NOTIFY ALL TRADES ABOUT INTENDED ACTIONS. THIS CONTRACTOR SHALL COORDINATE HIS WORK WITH ALL OTHER TRADES.

1.9. PRIOR TO STARTING CONSTRUCTION, DETERMINE EXACT INVERT ELEVATION, SIZE, DEPTH AND LOCATION OF EXISTING UTILITIES WHERE CONNECTIONS ARE TO BE MADE OR INTERSECTIONS OCCUR. NOTIFY ARCHITECT OR ENGINEER OF DISCREPANCY BETWEEN DRAWINGS AND ACTUAL FIELD CONDITIONS. WORK BACK TOWARD BUILDING FROM UTILITY CONNECTION FOR ALL PIPING SYSTEMS.

1.10. CONTRACTOR IS RESPONSIBLE FOR THE REMOVAL OF ALL DEBRIS, RUBBISH, ETC, ON A DAILY BASIS.

1.11. ALL WORK SHALL BE PERFORMED IN A CLEAN AND WORKMANLIKE MANNER..

1.12. THE CONTRACTOR SHALL BE RESPONSIBLE FOR THE SAFEKEEPING OF HIS OWN PROPERTY ON THE JOB SITE. OWNER ASSUMES NO RESPONSIBILITY FOR PROTECTION OF PROPERTIES AGAINST FIRE, THEFT AND ENVIRONMENTAL CONDITIONS.

1.13. THE WORK IN THE BUILDING SHALL BE DONE WHEN AND AS DIRECTED AND IN A MANNER SATISFACTORY TO THE OWNER.

1.14. CARE SHALL BE EXERCISED TO MINIMIZE ANY INCONVENIENCE OR DISTURBANCE TO OTHER AREAS OF THE BUILDING WHICH ARE TO REMAIN IN OPERATION. ISOLATE WORK AREAS BY MEANS OF TEMPORARY PARTITIONS AND/OR TARPS TO KEEP DUST AND DIRT WITHIN THE CONSTRUCTION AREA.

1.15. PROVIDE ALL POWER AND CONTROL WIRING AS WELL AS DISCONNECT SWITCHES AND ASSOCIATED EQUIPMENT REQUIRED BY THE OTHER TRADES IN THE EXECUTION OF THE PROJECT. THE CONTRACTOR SHALL REFER TO THE MECHANICAL DRAWING M1 AS WELL AS ALL OTHER DRAWINGS AND SECTIONS OF THE SPECIFICATIONS TO DETERMINE THE ACTUAL REQUIREMENTS OF ALL OTHER TRADES. ANY QUESTIONS OR AREAS OF CONCERN SHOULD BE ADDRESSED TO THE ENGINEER PRIOR TO THE TIME OF BID. ANY QUESTIONS AFTER THAT TIME SHALL BE ANSWERED BY THE ENGINEER BUT SHALL BE THE RESPONSIBILITY OF THE CONTRACTOR.

1.16. REFER TO MECHANICAL DRAWINGS FOR EQUIPMENT NOT SPECIFICALLY INDICATED ON ELECTRICAL DRAWINGS.

1.17. ELECTRICAL CONTRACTOR IS RESPONSIBLE FOR 120V AND ABOVE POWER AND CONTROL WIRING FOR EQUIPMENT SPECIFIED IN MECHANICAL SCHEDULES.

1.18. ENGINEER SHALL HAVE ACCESS TO WORK AT ALL TIMES AND SHALL BE NOTIFIED AT AGREED UPON TIMES OF STAGES OF WORK. WHERE WORK DOES NOT COMPLY WITH STANDARDS OR WORK SPECIFIED OR IMPLIED, THE DEFICIENCY SHALL BE CORRECTED AS DIRECTED BY THE ENGINEER. ALL SUBSEQUENT TESTING TO VERIFY OPERATION OR PERFORMANCE SHALL BE THE CONTRACTOR'S EXPENSE.

1.19. INVESTIGATE EACH SPACE THROUGH WHICH EQUIPMENT MUST BE MOVED. WHERE NECESSARY, EQUIPMENT SHALL BE SHIPPED FROM THE MANUFACTURER IN SECTIONS OF SIZE SUITABLE FOR MOVING THROUGH AVAILABLE RESTRICTIVE SPACES. ASCERTAIN FROM BUILDING OWNER AND TENANT AT WHAT TIMES OF THE DAY EQUIPMENT MAY BE MOVED THROUGH ALL AREAS.

1.20. MATERIALS AND WORKMANSHIP, UNLESS OTHERWISE NOTED, SHALL BE IN ACCORDANCE WITH BUILDING STANDARDS.

1.21. SUPPLY ALL ITEMS, ARTICLES, MATERIALS, USING METHODS, OPERATIONS OR TECHNIQUE MENTIONED, SHOWN, SCHEDULED OR REASONABLY IMPLIED BY THE DRAWINGS AND SPECIFICATIONS. THIS SHALL INCLUDE ALL LABOUR, MATERIAL, EQUIPMENT, TOOLS, APPARATUS AND INCIDENTALS REQUIRED TO PROVIDE A COMPLETE AND SAFELY OPERABLE ELECTRICAL SYSTEM OR SYSTEMS. INCLUDE ALL COSTS FOR PERMITS, LICENSES AND CERTIFICATE FILING AND INSPECTIONS REQUIRED BY AUTHORITIES HAVING JURISDICTION.

1.22. CONFIRM REQUIREMENT OF BIDDING DOCUMENTS AND DIVISION1.

1.23. UNLESS OTHERWISE STATED, ALL SPECIFIED MATERIALS ARE PER BASE BID SPECIFICATION. PROVIDE PRICING FOR THESE MATERIALS. ALTERNATES MAY BE PROPOSED AND EVALUATED FROM SUCCESSFUL BIDDER ONLY, AFTER TENDER HAS BEEN AWARDED, WITH ANY CHANGE IN COST, LEAD TIMES, ETC.

1.24. THE ELECTRICAL AND LIGHTING PLANS ARE INTENDED TO BE DIAGRAMMATIC AND ARE BASED, IN PART, ON OTHER'S DRAWINGS AND/OR TYPE OF EQUIPMENT. THEY ARE NOT INTENDED TO SHOW EVERY ITEM IN ITS EXACT LOCATION, THE EXACT DIMENSIONS OR ALL THE DETAILS OF THE EQUIPMENT.

1.25. ANY EQUIPMENT SHOWN ON THE PLANS SHALL BE RELOCATED WITHIN 3m WITHOUT ANY ADDITIONAL COST DUE TO SITE CONDITIONS, OWNER REQUEST, COORDINATION WITH OTHER TRADES, ETC.

1.26. COORDINATE NOISY WORK WITH OTHER TRADES TO MINIMIZE NOISE DISTURBANCES. SCHEDULE AT TIMES APPROVED BY THE OWNER.

2. COMPLIANCE, REGULATIONS AND PERMITS

2.1. ALL APPLICABLE CODES, LAWS AND REGULATIONS GOVERNING OR RELATING TO ANY PORTION OF THIS WORK ARE HEREBY INCORPORATED INTO AND MADE A PART OF THESE SPECIFICATIONS, AND THEIR PROVISIONS SHALL BE CARRIED OUT BY THE CONTRACTOR WHO SHALL INFORM THE OWNER, PRIOR TO SUBMITTING A PROPOSAL, OF ANY WORK OR MATERIALS WHICH VIOLATE ANY OF THE ABOVE LAWS AND REGULATIONS. ANY WORK DONE BY THE CONTRACTOR CAUSING SUCH VIOLATIONS SHALL BE CORRECTED BY THE CONTRACTOR.

2.2. MATERIALS AND WORKMANSHIP, UNLESS OTHERWISE NOTED, SHALL BE IN ACCORDANCE WITH BUILDING STANDARDS.

2.3. ELECTRICAL MATERIAL AND EQUIPMENT SUPPLIED SHALL BE APPROVED FOR USE IN ONTARIO AND BEAR ONE OF ESA CERTIFICATION MARKINGS OR ESA APPROVED FIELD EVALUATION AGENCY LABEL.

2.4. EQUIPMENT AND APPLIANCES TO COMPLY TO THE LATEST REVISION OF: ASHRAE 90.1, ONTARIO EFFICIENCY ACT.

2.5. INSTALLATION TO BE IN ACCORDANCE WITH THE LATEST EDITIONS OF: ONTARIO BUILDING CODE, ONTARIO ELECTRICAL SAFETY CODE INCLUDING ALL CURRENT BULLETINS, UNDERGROUND SYSTEMS CSA C22.3 NO.7.

2.6. IT IS CONTRACTORS RESPONSIBILITY TO PROVIDE ESA INSPECTIONS AS REQUIRED AND ESA CERTIFICATE OF APPROVAL UPON COMPLETION OF WORK

2.7. ALL GROUNDING AND BONDING TO BE IN CONFORMANCE WITH THE LATEST ONTARIO ELECTRICAL SAFETY CODE INCLUDING ALL CURRENT BULLETINS.

2.8. THE CONTRACTOR IS RESPONSIBLE FOR ALL WORK, MATERIALS, AND LABOUR TO SATISFY A COMPLETE WORKING SYSTEM WHETHER SPECIFIED OR IMPLIED.

2.9. THE WORK COVERED IN THE ELECTRICAL DRAWINGS, DESCRIBED HEREIN AND/OR IMPLIED BY THE DRAWINGS AND/OR THE NOTES, IS THE RESPONSIBILITY OF THE ELECTRICAL CONTRACTOR.

2.10. THE WORK UNDER CONTRACT INCLUDES ALL LABOR, MATERIALS, AND APPLIANCES NECESSARY FOR THE FURNISHING, INSTALLATION AND TESTING, COMPLETE AND READY FOR SAFE OPERATION OF THE SYSTEMS. WORK SHALL BE INSTALLED IN A NEAT, WORKMANLIKE MANNER. INCLUDE ALL COSTS FOR PERMITS, LICENSES AND CERTIFICATE FILING AND INSPECTIONS REQUIRED BY AUTHORITIES HAVING JURISDICTION.

2.11. THE CONTRACTOR SHALL SECURE ALL PERMITS, APPLICATIONS AND INSPECTIONS WITH THE AUTHORITIES HAVING JURISDICTION (SPECIFICALLY THE ELECTRICAL SAFETY AUTHORITY OF ONTARIO) AND PAY ANY AND ALL FEES THAT ARISE FROM THESE PERMITS, APPLICATIONS AND INSPECTIONS.

3. SHOP DRAWINGS

3.1. SUBMIT EQUIPMENT AND FIXTURE SHOP DRAWINGS TO THE ENGINEER FOR APPROVAL PRIOR TO PURCHASE, INSTALLATION OR FABRICATION. THE CONTRACTOR SHALL NOT PROCEED UNTIL APPROVED SHOP DRAWINGS ARE RETURNED FROM THE ENGINEER.

3.2. DO NOT SUBSTITUTE ANY HARDWARE OR FIXTURES WITHOUT PRIOR APPROVAL FROM THE ENGINEER.

3.3. CLEARLY INDICATE ON THE SHOP DRAWINGS THE NAME OF THE PROJECT AS STATED ON THE ELECTRICAL DRAWINGS.

3.4. CLEARLY INDICATE ON THE SHOP DRAWINGS, THE ITEM OR TYPE REFERENCE NUMBER FROM THE ELECTRICAL DRAWING SCHEDULES. WHERE NO SCHEDULE ITEM OR TYPE IS PRESENT, INDICATE DRAWING NUMBER, REVISION AND EQUIPMENT TAG.

3.5. AS A MINIMUM, SHOP DRAWINGS TO BE INCLUDED ARE AS FOLLOWS:
-LIGHT FIXTURES, OCCUPANCY SENSORS

3.6. CONTRACTOR TO PROVIDE LEAD TIMES AND AVAILABILITY OF ALL ELECTRICAL EQUIPMENT UPON SHOP DRAWING SUBMISSION.

3.7. ANY NOTIFICATIONS FROM THE SUPPLIER / MANUFACTURER TO THE CONTRACTOR PERTAINING TO EQUIPMENT DELAYS SHALL BE PROMPTLY FORWARDED TO THE ELECTRICAL ENGINEER.

3.8. UPON NOTIFICATION OF EXCESSIVE DELAYS FROM THE SUPPLIER / MANUFACTURER THE CONTRACTOR IS TO PROVIDE ALTERNATE ELECTRICAL EQUIPMENT OF EQUIVALENT FUNCTIONALITY TO ENSURE PROJECT COMPLETION IS NOT JEOPARDIZED. CONTRACTOR TO PROVIDE NEW LEAD TIME AND COSTING FOR ENGINEER AND CLIENT REVIEW AND APPROVAL.

4. SUBMITTALS FOR PROJECT CLOSEOUT

4.1. THE FOLLOWING SHALL BE SUBMITTED TO THE ENGINEER PRIOR TO SIGN OFF FOR OCCUPANCY:
-ELECTRICAL SAFETY AUTHORITY CERTIFICATE,
-FIRE ALARM VERIFICATION REPORT.

5. GUARANTEE

5.1. THE CONTRACTOR MUST CARRY PROPER AND ADEQUATE LIABILITY INSURANCE TO PROTECT BOTH HIMSELF AND THE OWNER FROM ALL CLAIMS RELATED TO HIS WORK FOR THIS PROJECT.

5.2. FURNISH A WRITTEN GUARANTEE TO REPLACE OR REPAIR PROMPTLY AND ASSUME RESPONSIBILITY FOR ALL EXPENSES INCURRED FOR ANY WORKMANSHIP AND EQUIPMENT IN WHICH DEFECTS DEVELOP WITHIN ONE YEAR FROM THE DATE OF ACTUAL USE OF EQUIPMENT OR OCCUPANCY OF SPACES BY OWNER, WHICHEVER DATES IS EARLIER. THIS WORK SHALL BE DONE AS DIRECTED BY THE OWNER, WHERE DEFECTS OCCUR, ASSUME RESPONSIBILITY FOR ALL EXPENSES INCURRED IN REPAIRING AND REPLACING WORK OF THE OTHER TRADES AFFECTED BY DEFECTS.

6. METHODS

6.1. ALL EQUIPMENT AND LOCATIONS TO BE CONFIRMED. ANY DISCREPANCIES SHALL BE BROUGHT TO THE ATTENTION OF THE ENGINEER FOR RESOLUTION.

6.2. ALL EQUIPMENT SUPPLIED / INSTALLED BY CONTRACTOR SHALL BE IDENTIFIED BY LAMACOID IDENTIFICATION PLATES. LAMACOID PLATES ARE TO BE 3mm (1/8in) THICK PLASTIC ENGRAVED SHEET, BLACK FACE, WHITE CORE, MECHANICALLY ATTACHED WITH SELF TAPPING SCREWS. WHITE LETTERS 20mm (3/4in) HIGH FOR MAJOR ELECTRICAL EQUIPMENT, WHITE LETTERS 12mm (1/2in) HIGH FOR JUNCTION BOXES, DISCONNECTS, ETC. IDENTIFICATION TO BE IN ENGLISH. BLACK NAMEPLATES FOR NORMAL POWER, RED NAMEPLATES FOR EMERGENCY POWER, BLUE NAMEPLATES FOR UPS POWER.

6.3. REFER TO MECHANICAL DRAWINGS FOR EQUIPMENT NOT SPECIFICALLY INDICATED ON ELECTRICAL DRAWINGS.

6.4. PROVIDE ADEQUATELY RATED LOCAL DISCONNECT SWITCHES FOR ROOF TOP HVAC EQUIPMENT IF NOT PROVIDED AS PART OF EQUIPMENT SUPPLY PACKAGE.

6.5. ALL REUSED EQUIPMENT TO BE ELECTRICALLY TESTED AND VISUALLY INSPECTED.

6.6. PROVIDE APPROPRIATELY SIZED CONCRETE HOUSEKEEPING PADS (MIN. 2" HEIGHT) FOR ANY FLOOR MOUNTED ELECTRICAL DISTRIBUTION EQUIPMENT.

6.7. PROVIDE ALL SLEEVES, INSERTS AND HANGERS REQUIRED FOR THE ELECTRICAL WORK. TREAT ALL SLEEVES OR HOLES PIERCING ACOUSTICAL SEPARATIONS FOR INSTALLATIONS OF THE DIVISION TO MAINTAIN ACOUSTICAL RATINGS. ALL GAPS SHALL BE PACKED WITH ACOUSTICAL INSULATION AND SEALED AT BOTH ENDS WITH ACOUSTICAL CAULKING. PATCH ALL OPENINGS AROUND INSTALLATIONS OF THIS DIVISION PIERCING FIRE OR SMOKE SEPARATIONS WITH AN APPROVED WATERTIGHT SMOKE AND FIRE STOP SEALANT.

6.8. ENSURE THAT VAPOR BARRIER CONTINUITY IS MAINTAINED THROUGHOUT INSTALLATION. FOR EACH APPLICABLE OUTLET BOX, PROVIDE AN APPROPRIATELY SIZED HUBBLE OR EQUAL VAPOR BARRIER BOX SURROUNDING OUTLET BOX TO SEAL ALL AIR LEAKS.

6.9. SUPPLY AND INSTALL WIRING DEVICES EQUAL TO HUBBELL COMMERCIAL SPECIFICATION GRADE. COLOUR OF DEVICES AND WALL PLATES ARE SUBJECT TO ARCHITECT APPROVAL.

6.10. ANY ELECTRICAL DEVICE BOXES (RECEPTACLES, TELEVISION, TELEPHONE, FIRE ALARM, ETC.,) LOCATED BACK-TO-BACK IN DEMISING WALLS ARE TO BE STAGGERED BY A MINIMUM OF 1 STUD SPACE OR 300mm FOR CONCRETE WALLS. WHERE STAGGERING OF THESE BOXES IS NOTE POSSIBLE, PEARLITE OR PUTTY PADS ARE REQUIRED ON THE BACKSIDE OF THE BOXES.

6.11. ALL RECEPTACLES EXPOSED TO THE WEATHER OF CSA CONFIGURATION 5-15R, 5-20R, 5-20RA, 6-15R, 6-20R AND 6-20RA SHALL BE PROVIDED WITH COVER PLATE SUITABLE FOR WET LOCATIONS WHETHER OR NOT PLUG IS INSTALLED AS PER OESC RULE 26-708(2).

7. CONDUCTORS AND RACEWAY

7.1. THE CONDUIT LAYOUT IS TO BE BASED ON MOST EFFICIENT ROUTING WITHIN CONSTRAINTS OF ACCESS, WALL OPENINGS AND CONDUIT ENTRY TO EQUIPMENT.

7.2. SUPPORT ALL CONDUITS, RACEWAYS AND CABLES WITH APPROVED CLIPS AND SCREWS.

7.3. ALL WIRING CONDUCTING UP TO AND INCLUDING 100 AMPS TO BE COPPER, MINIMUM #12 AWG. ALL WIRING CONDUCTING GREATER THAN 100 AMPS TO BE ALUMINUM.

7.4. FEEDER CIRCUITS ARE TO HAVE A MAXIMUM VOLTAGE DROP OF 2% BASED UPON ACTUAL LENGTH OF CONDUCTORS UPON INSTALLATION. BRANCH CIRCUITS ARE TO HAVE A MAXIMUM VOLTAGE DROP OF 3%.

7.5. WIRING AND RACEWAY IN PLENUM SPACE ABOVE CEILING IS TO BE RATED AS SUCH (EG. FT6, FT4 OR NON-COMBUSTIBLE). FLEXIBLE CORD TO LIGHT FIXTURES IN PLENUM SPACE NEED NOT CONFORM PROVIDED THAT THE LENGTH IS 3M OR LESS AND IT IS RATED FOR AT LEAST 90 DEGREES CELSIUS AND IS OTHERWISE PROPERLY RATED FOR SPACE.

7.6. ALL EXISTING WIRING TO BE MEGGERED BEFORE STARTING CONSTRUCTION. REPORT FINDINGS OF FAILED WIRING TO ENGINEER PRIOR TO REPLACEMENT.

7.7. OBSOLETE WIRING IS TO BE REMOVED.

8. TELEPHONE AND DATA

8.1. TELEPHONE AND DATA OUTLETS TO BE PROVIDED AS SHOWN ON THE DRAWING

8.2. TELEPHONE AND DATA OUTLETS TO BE SPECIFICATION GRADE.

8.3. PROVIDE EMPTY DEVICE BOXES, CONDUITS (MINIMUM 1/2") AND PULL CORDS FOR ALL COMMUNICATION OUTLET LOCATIONS SHOWN ON DRAWINGS. TERMINATE CONDUITS IN ROOM CONTAINING BACKBOARD. WHERE DROP CEILINGS EXIST AND AT THE DISCRETION OF THE OWNER, CONDUITS MAY BE TERMINATED ABOVE THE FINISHED CEILING SPACE.

8.4. ALL EXISTING ELECTRICAL/DATA/PHONE OUTLETS TO BE REMOVED UNLESS INDICATED ON DRAWING.

8.5. ALL WORK IS TO BE COORDINATED WITH THE INFORMATION TECHNOLOGY CONTRACTOR AND/OR OWNER

8.6. TYPE AND LOCATION OF DATA EQUIPMENT TO BE DETERMINED BY INFORMATION TECHNOLOGY CONTRACTOR.

9. OUTDOOR LIGHTING

9.1. ALL LIGHT FIXTURES TO BE CONFIRMED BY OWNER.

9.2. LIGHTING SHALL BE AS SHOWN ON THE DRAWING. ANY DEVIATION BY CONTRACTOR SHALL SATISFY ASHRAE 90.1.

9.3. ALL EXTERIOR BUILDING GROUNDS LUMINAIRES GREATER THAN 100W TO HAVE LAMPS WITH MINIMUM EFFICACY OF 60 LUMENS/W

9.4. ALL EXTERIOR LIGHTING TO BE OPERATIONAL AT -29°C.

9.5. LIGHTING CONTROLLED BY PHOTOCELL & TIMER.

9.6. LIGHTS TO BE EQUIPPED WITH DEFLECTORS TO ELIMINATE LIGHT TRESPASSING PROPERTY LINE.

10. FIRE ALARM

10.1. INSTALL ALARM SYSTEM COMPONENTS AS INDICATED ON THE DRAWINGS AND IN ACCORDANCE TO OBC 3.2.4.

10.2. PROVIDE SHOP DRAWINGS AND THIRD PARTY CERTIFICATION OF VERIFICATION, EG. SIMPLEXGRINNEL, CHUBB EDWARDS, ETC.

10.3. FIRE ALARM SYSTEMS MUST BE INSTALLED IN CONFORMANCE WITH CAN/ULC-S524, "INSTALLATION OF FIRE ALARM SYSTEMS".

10.4. FIRE ALARM SYSTEM MUST BE IN CONFORMANCE WITH CAN/ULC-S537 "VERIFICATION OF FIRE ALARM SYSTEMS".

10.5. ANY SINGLE FIRE ALARM HORN/STROBE IN ALARM STATE IS TO ACTIVATE ALL FIRE ALARM HORN/STROBE UNITS SIMULTANEOUSLY.

11. MANDATORY ASHRAE 90.1/OBC REQUIREMENTS

11.1. ALL NEW NEMA CLASS 1 LOW VOLTAGE DRY TYPE TRANSFORMERS ARE TO MEET NOMINAL EFFICIENCY LEVELS AS PER CAN/CSA C802.2-18, "TEST METHOD AND MINIMUM EFFICIENCY VALUES FOR DRY-TYPE TRANSFORMERS".

11.2. CONTRACTOR IS TO INSTALL OCCUPANCY SENSORS FOR AUTOMATIC LIGHTING SHUTOFF OF FIXTURES INDICATED. SHUT OFF BY ALTERNATE AUTOMATIC CONTROL DEVICES IS TO BE APPROVED BY ENGINEER.

11.3. FUNCTIONAL TESTING OF ALL LIGHTING CONTROL DEVICES AND SYSTEMS IS TO BE PERFORMED BY A THIRD PARTY.

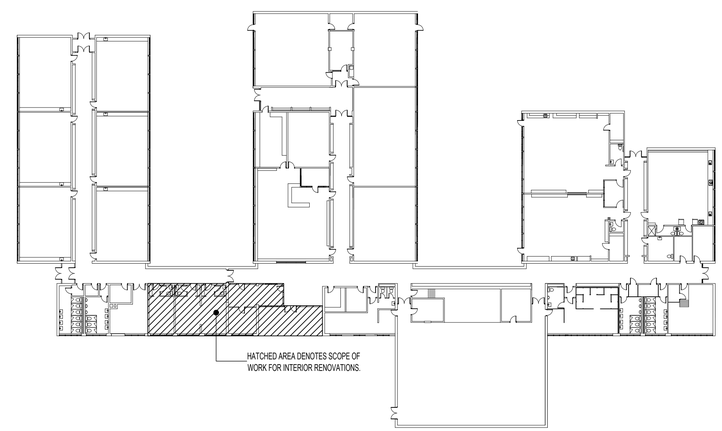

KEY PLAN

SCALE: 1/32" = 1'-0"

DRAWING LIST

E1.1 ELECTRICAL NOTES & KEY PLAN
E1.2 LEGENDS, LIGHT SCHEDULE, DETAILS, PANEL SCHEDULE & COORDINATION TABLE
E2 ELECTRICAL SITE PLAN
E3 ELECTRICAL & LIGHTING DEMOLITION PLANS
E4 ELECTRICAL & LIGHTING PROPOSED PLANS

LICENSED PROFESSIONAL ENGINEER
MATT WRIGHT
04/15/2024
240305
PROVINCE OF ONTARIO

N

Do not scale drawings. Report any discrepancies to Hallex Engineering Ltd. before proceeding.

This drawing must be signed and sealed by the Engineer prior to use in construction or submission for building permit.

All construction shall be in accordance with latest edition of the Ontario Building Code and all applicable Ontario regulations.

No part of this drawing including details, calculations or schedules may be reproduced in any form, either in part or whole, without the prior written consent of Hallex Engineering Ltd.

HALLEX ENGINEERING LTD.
745 South Service Rd. Unit 301A, Stoney Creek, ON L8E 5Z2 Tel: 905-561-4016
4999 Victoria Ave., Niagara Falls, ON L2E 4C9 Tel: 905-357-4015 Fax: 905-353-1105

REV.	ISSUED FOR:	YYYY/MM/DD
0	PERMIT/TENDER	2024/04/15

CLIENT:
WHITELINE ARCHITECTS INC.
146 JAMES STREET
ST. CATHARINES, ON.
L2R 5C5

PROJECT:
NCDSB ST. THERESE CES
INTERIOR RENOVATIONS
530 KILLALY ST. EAST
PORT COLBORNE, ON.

SHEET TITLE:
ELECTRICAL NOTES & KEY PLAN

JOB NUMBER:	240305
DATE:	MAR. 05, 2024
DRAWN BY:	MW
DESIGNED BY:	MW
CHECKED BY:	MW
SCALE:	AS SHOWN
DWG.	E1.1
REV.	0

ELECTRICAL LEGEND	
	DUPLEX RECEPTACLE, 15A/120V
	DUPLEX RECEPTACLE, 20A/120V
	DUPLEX RECEPTACLE MOUNTED OVER COUNTER, COORDINATE WITH ARCHITECTURAL DRAWINGS FOR EXACT MOUNTING HEIGHT, 15A/120V
	GROUND FAULT TYPE DUPLEX RECEPTACLE, , 15A/120V, 15A/120V OVER COUNTER, 20A/120V, 20A/120V OVER COUNTER
	SPECIAL RATED RECEPTACLE, AMP & VOLT RATING INDICATED OR DIRECT CONNECTION AS REQUIRED
	ELECTRICAL PANEL, RECESSED MTD., SEE SCHEDULE FOR DETAILS
	ELECTRICAL PANEL, SURFACE MTD., SEE SCHEDULE FOR DETAILS
	OCCUPANCY SENSOR, REFER TO LIGHTING NOTES 3 & 4 ON THIS DRAWING
$	TOGGLE SWITCH, 'D' - DIMMER SWITCH
$	3-WAY SWITCH
D#	DATA OUTLET, # INDICATES QUANTITY OF JACKS, C/W 1/2" EMT CONDUIT FROM JUNCTION BOX TO CEILING SPACE, MOUNTED 18" A.F.F. UNLESS NOTED OTHERWISE. IF OUTLET IS IN A ROOM WITH AN OPEN CEILING, RUN CONDUIT ALONG CEILING TO NEAREST DROP CEILING OR DATA RACK, WHICHEVER IS CLOSER
T#	TELEPHONE OUTLET, # INDICATES QUANTITY OF JACKS, C/W 1/2" EMT CONDUIT FROM JUNCTION BOX TO CEILING SPACE, MOUNTED 18" A.F.F. UNLESS NOTED OTHERWISE. IF OUTLET IS IN A ROOM WITH AN OPEN CEILING, RUN CONDUIT ALONG CEILING TO NEAREST DROP CEILING OR DATA RACK, WHICHEVER IS CLOSER
JB	JUNCTION BOX
	AUTOMATIC DOOR OPERATOR PUSH BUTTON, MOUNTED BETWEEN 900mm & 1100mm A.F.F. PROVIDE 2"X4" BOX AND 16mm EMT CONDUIT AS REQUIRED. FOR WIR POWER DOOR REFER TO DOOR/CALL SYSTEM WIRING DIAGRAM. POWER SUPPLIES AND 120/24V TRANSFORMERS MOUNTED IN CEILING SPACE
TM	INTERMATIC 7-DAY TIMER, ET1705C OR EQUIVALENT
CR	CARD READER, C/W 1/2" EMT CONDUIT FROM JUNCTION BOX TO CEILING SPACE, MOUNTED 12" A.F.F. UNLESS NOTED OTHERWISE. IF CARD READER IS IN A ROOM WITH AN OPEN CEILING, RUN CONDUIT ALONG CEILING TO NEAREST DROP CEILING OR DATA RACK, WHICHEVER IS CLOSER
	WEATHERPROOF NON-FUSED DISCONNECT SWITCH

FIRE DETECTION LEGEND	
	HEAT DETECTOR, RATE-OF-RISE

LIGHT SCHEDULE							
ITEM	SYMBOL	No. LAMPS	VOLTS	LAMP TYPE	WATTS	DESCRIPTION
A		-	120	-	-	EXISTING 2'x4' RECESSED FIXTURE TO BE REMOVED.
B		-	120	-	-	EXISTING 1'x4' RECESSED FIXTURE TO BE REMOVED. 'SF' REPRESENTS SURFACE MOUNTED FIXTURE TO BE REMOVED.
C		-	120	-	-	EXISTING SURFACE MOUNTED DOME FIXTURE TO BE REMOVED.
D		-	120	LED	55	NEW LITHONIA LIGHTING 2'x4' RECESSED FLAT PANEL, CPANL 2X4 AL06 SWW7 M2, ENSURE 4000K COLOUR TEMPERATURE AND NOMINAL LUMENS OF 6000
E		-	120	LED	41	NEW LITHONIA LIGHTING 1'x4' RECESSED FLAT PANEL, CPANL 1X4 AL01 SWW4 M2, ENSURE 4000K COLOUR TEMPERATURE AND NOMINAL LUMENS OF 4400
F		-	120	LED	14	NEW LITHONIA LIGHTING 6" DOWNLIGHT, WF6 LED 40K 90CRI MW M6, ENSURE 4000K COLOUR TEMPERATURE
SLA		-	120	LED	47	NEW GARDCO PUREFORM WALLPACK, 4000K, PWS-4BL-300-NW-G2-4-UNC-PCB-BK, 'WG' = C/W WIREGUARD
SLB#		-	120	LED	16	NEW ADONIS LINER LED UNDER CANOPY FIXTURE, ADONIS-HYDRAHDX628, # INDICATES LENGTH OF FIXTURE, 'SF' = SURFACE MOUNTED, 'RE' = RECESSED

LIGHT TAG LEGEND

A- C 07 1 a

- CONTROLLING LIGHT SWITCH REFERENCE (1 TO 3 CHARACTERS), 'PC' = PHOTOCONTROL, 'NL' = NIGHT LIGHT, 'FO' = CONTROLLED BY FIXTURE MOUNTED OCCUPANCY SENSOR
- FLOOR DESIGNATION (1 OR 2 CHARACTERS), 'R' = ROOF, 'E' = EXTERIOR
- CIRCUIT NUMBER (2 CHARACTERS)
- PANEL DESIGNATION (1 TO 3 CHARACTERS)
- LIGHT SCHEDULE ITEM REFERENCE (1 OR 2 CHARACTERS)

EX. ABOVE
A-C07 1a
- ITEM A IN LIGHT SCHEDULE
- PANEL C
- CIRCUIT 7
- FLOOR 1
- SWITCH a

STANDARD MOUNTING HEIGHTS	
LOCAL SWITCHES	1150 mm
WALL RECEPTACLES - GENERAL	350 mm
WALL RECEPTACLES - ABOVE TOP OF COUNTERS OR COUNTER SPLASH BACKS	175 mm
WALL RECEPTACLES - IN ELECTRICAL/MECHANICAL SERVICE ROOMS	700 mm
TELEPHONE AND DATA OUTLETS	350 mm
POWER DOOR OPERATOR CONTROLS	1000 mm
MANUAL PULL STATION, THERMOSTATS, BARRIER - FREE	1200 mm
OTHER DEVICES, SWITCHES, ETC., IN BARRIER - FREE PATH OF TRAVEL	1000 mm
FIRE ALARM HORN/STROBE, EMERGENCY CALL SYSTEM VISUAL INDICATOR	2350 mm TO TOP OF DEVICE (ADJUST IN ANY CASE FOR A MINIMUM OF 150 mm SPACE BETWEEN THE CEILING AND THE TOP OF DEVICE)
EMERGENCY LIGHTING REMOTE HEADS	2450 mm
PANELBOARDS	AS REQUIRED BY CODE OR AS INDICATED

ABBREVIATION TABLE	
DM	DIMMING SWITCH
DP	DISTRIBUTION PANEL
EF	EXHAUST FAN
ER	EXISTING TO BE RELOCATED
EX	EXISTING TO REMAIN
FD	FUSED DISCONNECT SWITCH
OC	MOUNTED OVER COUNTER/SINK
PC	PHOTOCELL CONTROL
PP	POWER PANEL
RL	RELOCATED ITEM
RM	EXISTING TO BE REMOVED
WP	WEATHER PROOF
WG	WIREGUARD

NOTE:
1. REFER TO MECHANICAL DRAWINGS FOR ALL MECHANICAL/PLUMBING EQUIPMENT ABBREVIATIONS

LIGHTING NOTES:
1. LIGHT SWITCHES WITH THE SAME LIGHTING DESIGNATION, BUT NOT SHOWN AS 3-WAY SWITCHES ARE TO BE WIRED IN SERIES.
2. COORDINATE FINAL LOCATION OF ALL LIGHTING WITH MECHANICAL DRAWINGS.
3. CEILING MOUNTED OCCUPANCY SENSORS TO BE SENSORSWITCH CMR-PDT-10 UNLESS NOTED OTHERWISE. ALTERNATIVES TO BE APPROVED BY ENGINEER.
4. WALL MOUNTED OCCUPANCY SENSORS TO BE SENSORSWITCH WSX-PDT-D-WH UNLESS NOTED OTHERWISE. LIGHTS TO TURN ON TO 50% LIGHT LEVEL UPON INITIAL OCCUPANCY. ALTERNATIVES TO BE APPROVED BY ENGINEER.

ELECTRICAL LEGENDS & LIGHT SCHEDULE

SCALE: N.T.S.

EXISTING HOUSE PANEL A						36 CIRCUIT 225A, 3PH SURFACE MOUNTED		
CIRCUIT #		DESCRIPTION	AMPS A	AMPS B	AMPS C	VOLTS	PHASE	C.B.A.T.
1		EX. PHOTOCELL	X			120	1	15
3		EX. POLE LIGHTS		X		120	1	15
5		EX. HONEYWELL PANEL			X	120	1	15
7		EX. FURNACE AIR	X			120	1	15
9		EX. SPARE		X		120	1	15
11		EX. FREEZER			X	120	1	15
13		EX. FRIDGE RANGE	X			120	1	15
15		EX. COMPUTER HUB		X		120	1	15
17		EX. WEST ENTRY POLE LIGHTS			X	120	1	20
19		EX. SPARE	X			208	1	30
21				X				
23		EX. PANEL PLUG			X	120	1	15
25		EX. KEY SCAN	X			120	1	15
27								
29		EX. PRINCIPAL COMPUTER			X	120	1	15
31		**EXSITING OFFICE HEATER TO BE SPARE**	**X**			**208**	**1**	**20**
33				**X**				
35		**NEW POWER DOOR OPERATORS**			**12**	**120**	**1**	**15***
	2	EX. PROGRAMMABLE TIMER	X			120	1	15
	4	EX. OUTSIDE LIGHTS		X		120	1	15
	6	EX. JOHNSON CONTROLS			X	120	1	15
	8	EX. HOT WATER PLUG	X			120	1	15
	10	EX. DISHWASHER		X		120	1	15
	12	EX. HEAT TRACE			X	120	1	15
	14	EX. HEAT TRACE	X			120	1	15
	16	EX. SPARE		X		120	1	15
	18	EX. PHOTOCOPIER			X	120	1	20
	20	EX. SECURITY	X			120	1	15
	22	EX. COMPUTER ROOM 3		X		120	1	15
	24	EX. COMPUTER ROOM 3			X	120	1	15
	26	EX. STAFF RANGE	X			208	1	30
	28			X				
	30	**NEW HEAT PUMP HP-1 AND AC UNITS**			**18**	**208**	**1**	**25***
	32		**18**					
	34	**NEW ERV-1**		**2**		**120**	**1**	**15***
	36	**NEW ROOFTOP MAINTANENCE RECEPTACLE**			**16**	**120**	**1**	**20***
THE ELECTRICAL CONTRACTOR IS TO CONFIRM FINAL CIRCUIT LOAD AND ENSURE CIRCUIT PROTECTION, WIRING AND CONDUIT IS SIZED TO SATISFY THE ONTARIO ELECTRICAL SAFETY CODE								
		TOTAL PHASE A	18					
		TOTAL PHASE B		2				
		TOTAL PHASE C			46			

UPDATED PANEL SCHEDULE

SCALE: N.T.S.

MECHANICAL / ELECTRICAL COORDINATION SCHEDULE																					
DEVICE DETAILS			ELECTRICAL CHARACTERISTICS							F/A SHUTDOWN (BY DIV. 16.)	REMOTE CONTROL (THIS COLUMN REFERS TO INTERLOCKING ONLY. NOT THE EQUIPMENT ITSELF)										NOTES
TAG	DESCRIPTION	LOCATION	HORSEPOWER	KW	FULL LOAD AMPS	MINIMUM CIRCUIT AMPS	VOLTAGE	PHASE	ISOLATING DEVICE	EQUIPMENT TO SHUTDOWN	THERMOSTAT	R/A THERMOSTAT	BMS	SWITCH	SENSOR	TIMER	INTERLOCKED WITH	CONTROL INTERLOCKED BY	CONTROL SUPPLIED BY	CONTROL INSTALLED BY	LEGEND: E = ELECTRICAL CONTRACTOR M = MECHANICAL CONTRACTOR O = OTHER
ERV-1	ENERGY RECOVERY VENTILATOR	CORRIDOR (1.02)					120	1	PANEL A							X		M	M	M	LOW VOLTAGE CONNECTIONS BY DIV. 15. HIGH VOLTAGE CONNECTIONS BY DIV. 16.
AC-1	INDOOR AC UNIT				0.40		208	1	PANEL A		X						HP-1	M	M	M	LOW VOLTAGE CONNECTIONS BY DIV. 15. HIGH VOLTAGE CONNECTIONS BY DIV. 16. INTERLOCKED w/ TIMER FOR ON/OFF OPERATION.
AC-2	INDOOR AC UNIT	HEALTH ROOM (102)			0.40		208	1	PANEL A		X						HP-1	M	M	M	LOW VOLTAGE CONNECTIONS BY DIV. 15. HIGH VOLTAGE CONNECTIONS BY DIV. 16.
AC-3	INDOOR AC UNIT	PRINCIPAL'S OFFICE (101A)			0.40		208	1	PANEL A		X						HP-1	M	M	M	LOW VOLTAGE CONNECTIONS BY DIV. 15. HIGH VOLTAGE CONNECTIONS BY DIV. 16.
AC-4	INDOOR AC UNIT	RECEPTION (101)			0.40		208	1	PANEL A		X						HP-1	M	M	M	LOW VOLTAGE CONNECTIONS BY DIV. 15. HIGH VOLTAGE CONNECTIONS BY DIV. 16.
HP-1	HEAT PUMP	ROOF (SEE PLAN)				18.4	208	1	PANEL A								AC-1, AC-2, AC-3 & AC-4	M	M	M	LOW VOLTAGE CONNECTIONS BY DIV. 15. HIGH VOLTAGE CONNECTIONS BY DIV. 16.

MECHANICAL/ELECTRICAL COORDINATION TABLE

SCALE: N.T.S.

LICENSED PROFESSIONAL ENGINEER
MATT WRIGHT
04/15/2024
240305
PROVINCE OF ONTARIO

Do not scale drawings. Report any discrepancies to Hallex Engineering Ltd. before proceeding.

This drawing must be signed and sealed by the Engineer prior to use in construction or submission for building permit.

All construction shall be in accordance with latest edition of the Ontario Building Code and all applicable Ontario regulations.

No part of this drawing including details, calculations or schedules may be reproduced in any form, either in part or whole, without the prior written consent of Hallex Engineering Ltd.

HALLEX ENGINEERING LTD.
745 South Service Rd. Unit 301A,
Stoney Creek, ON L8E 5Z2
Tel: 905-561-4016
4999 Victoria Ave.,
Niagara Falls, ON L2E 4C9
Tel: 905-357-4015 Fax: 905-353-1105

REV.	ISSUED FOR:	YYYY/MM/DD
0	PERMIT/TENDER	2024/04/15

CLIENT:
WHITELINE ARCHITECTS INC.
146 JAMES STREET
ST. CATHARINES, ON.
L2R 5C5

PROJECT:
NCDSB ST. THERESE CES
INTERIOR RENOVATIONS
530 KILLALY ST. EAST
PORT COLBORNE, ON.

SHEET TITLE:
LEGENDS, LIGHT SCHEDULE, DETAILS, PANEL SCHEDULE & COORDINATION TABLE

JOB NUMBER:	240305
DATE:	MAR. 05, 2024
DRAWN BY:	MW
DESIGNED BY:	MW
CHECKED BY:	MW
SCALE:	AS SHOWN
DWG.	E1.2
REV.	0

GENERAL E2 NOTES	
1	ALL EXISTING EXTERIOR WALLPACKS ARE TO BE REMOVED AND REPLACED WITH NEW 'SLA' FIXTURES IN EXISTING LOCATIONS. ENSURE NEW FIXTURES ARE MOUNTED AT THE SAME HEIGHT AS THE EXISTING FIXTURE.
2	ALL WALLPACKS TAGGED WITH 'WG' ARE TO BE INSTALLED WITH A WIREGUARD TO MATCH EXISTING CONDITIONS.

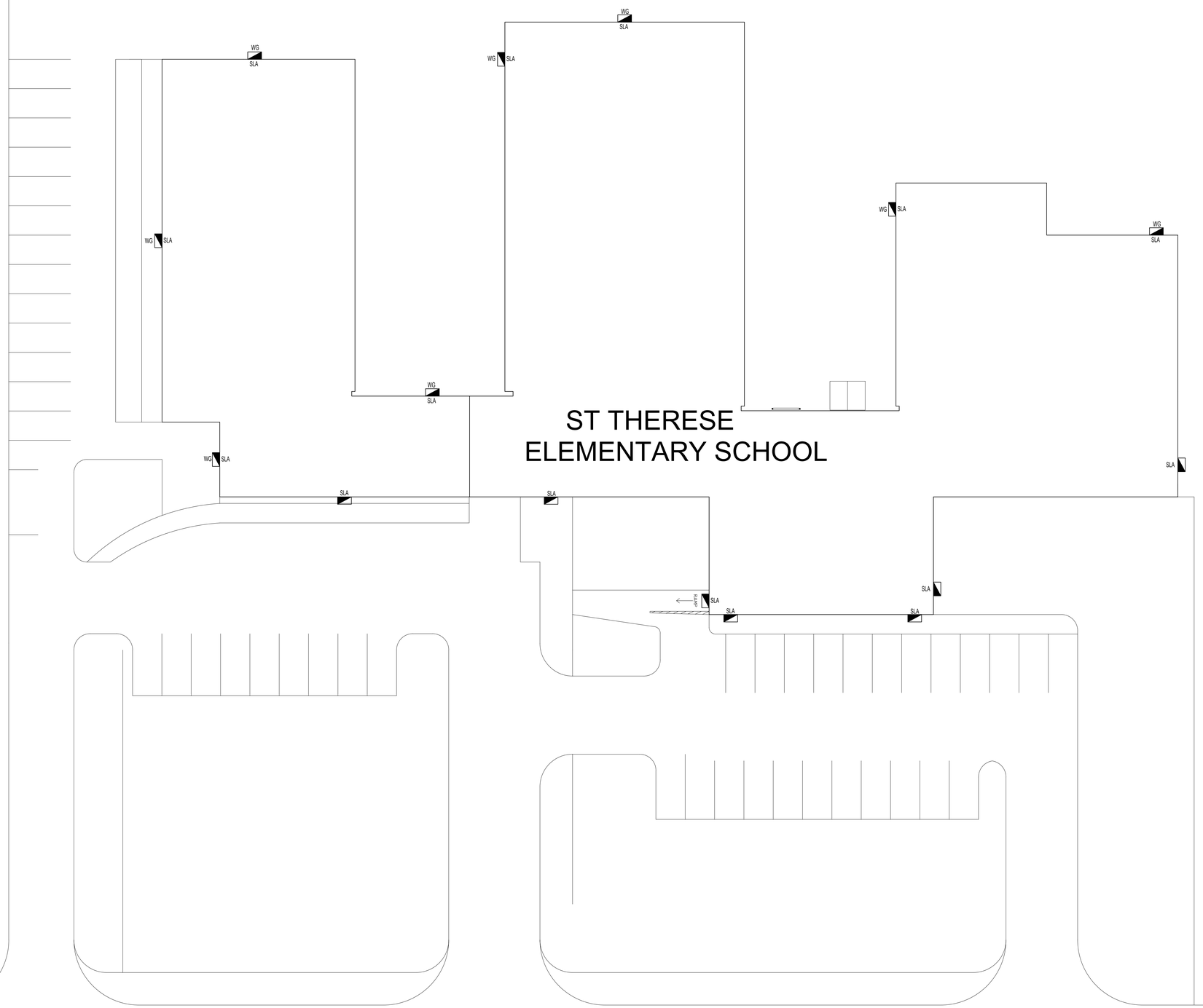

ELECTRICAL SITE PLAN

SCALE: 1/16" = 1'-0"

LICENSED PROFESSIONAL ENGINEER
MATT WRIGHT
04/15/2024
240305
PROVINCE OF ONTARIO

Do not scale drawings. Report any discrepancies to Hallex Engineering Ltd. before proceeding.

This drawing must be signed and sealed by the Engineer prior to use in construction or submission for building permit.

All construction shall be in accordance with latest edition of the Ontario Building Code and all applicable Ontario regulations.

No part of this drawing including details, calculations or schedules may be reproduced in any form, either in part or whole, without the prior written consent of Hallex Engineering Ltd.

HALLEX ENGINEERING LTD.
745 South Service Rd. Unit 301A,
Stoney Creek, ON L8E 5Z2
Tel: 905-561-4016
4999 Victoria Ave.,
Niagara Falls, ON L2E 4C9
Tel: 905-357-4015 Fax: 905-353-1105

REV.	ISSUED FOR:	YYYY/MM/DD
0	PERMIT/TENDER	2024/04/15

CLIENT:
WHITELINE ARCHITECTS INC.
146 JAMES STREET
ST. CATHARINES, ON.
L2R 5C5

PROJECT:
NCDSB ST. THERESE CES
INTERIOR RENOVATIONS
530 KILLALY ST. EAST
PORT COLBORNE, ON.

SHEET TITLE:
ELECTRICAL SITE PLAN

JOB NUMBER:	240305
DATE:	MAR. 05, 2024
DRAWN BY:	MW
DESIGNED BY:	MW
CHECKED BY:	MW
SCALE:	AS SHOWN
DWG.	E2
REV.	0

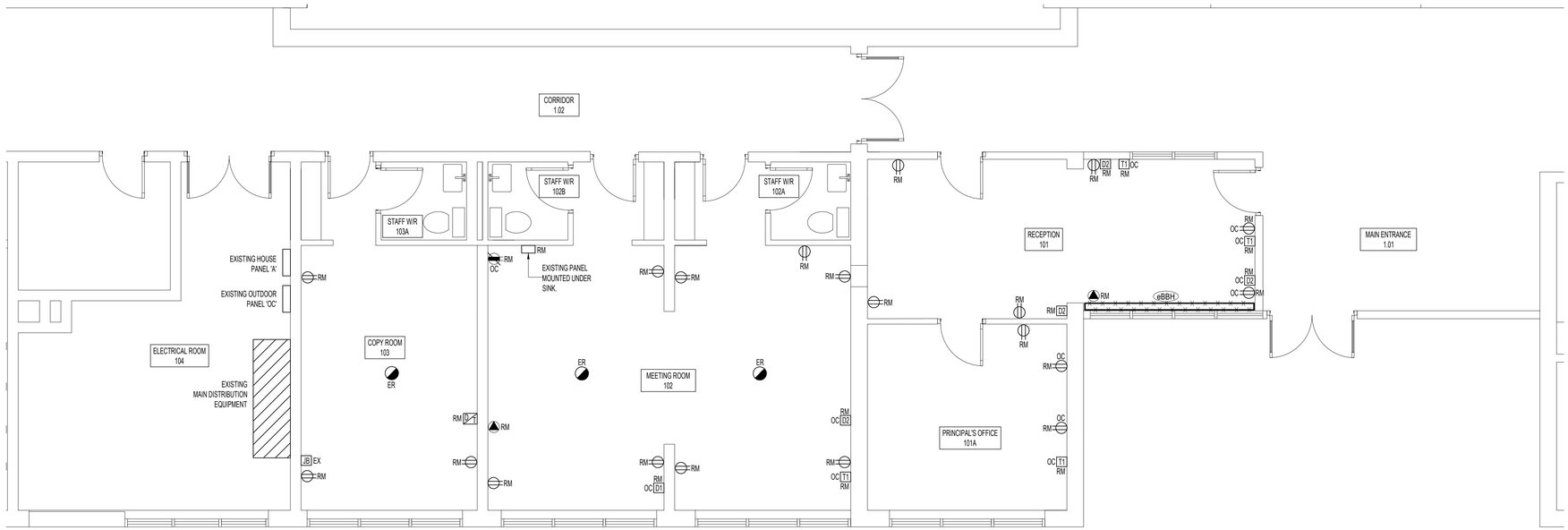

ELECTRICAL DEMOLITION PLAN

SCALE: 1/4" = 1'-0"

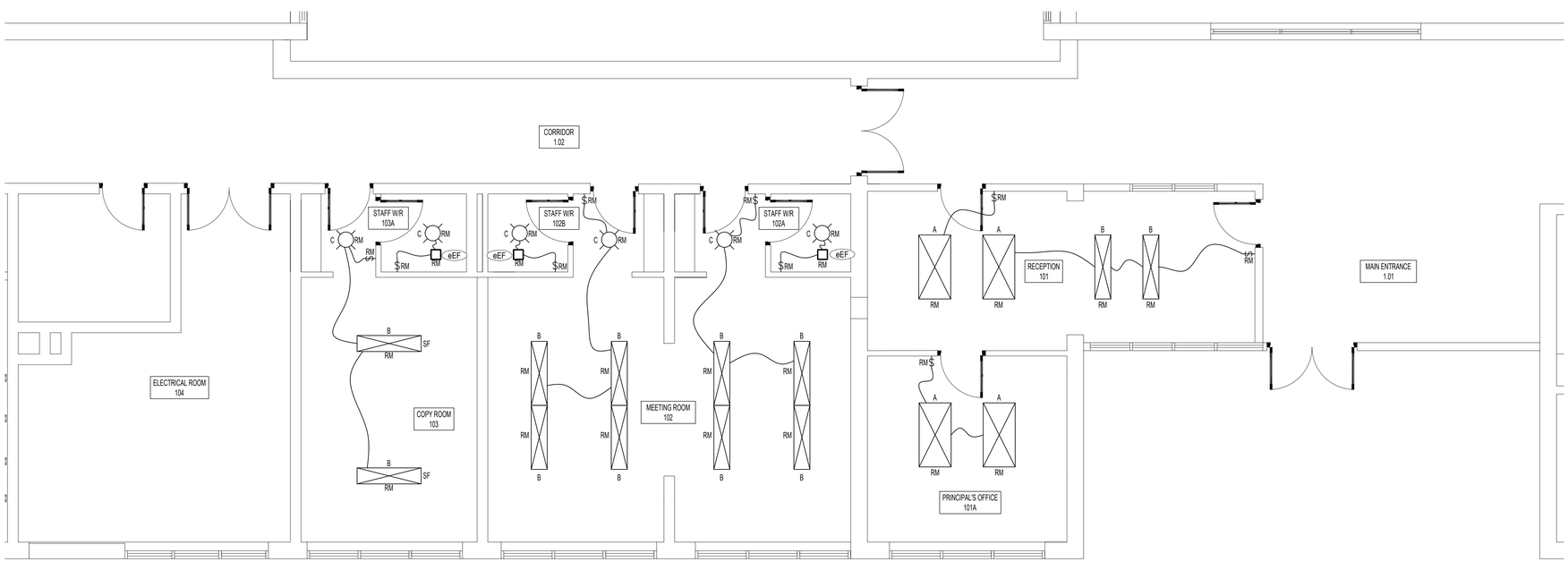

LIGHTING DEMOLITION PLAN

SCALE: 1/4" = 1'-0"

GENERAL E3 NOTES	
1	DISCONNECT AND REMOVE EXISTING RECEPTACLES AND DATA. INSTALL BLANKING COVERS AS NECESSARY TO EXTEND CONDUCTORS TO NEW RECEPTACLE AND DATA LOCATIONS.
2	DISCONNECT AND STORE IN A CLEAN SAFE SPACE ALL HEAT DETECTORS TO FACILITATE THE REMOVAL OF THE EXISTING CEILING.
3	DISCONNECT, REMOVE AND TURN OVER TO THE BOARD THE EXISTING PANEL MOUNTED UNDERNEATH THE SINK. PULL BACK CONDUCTORS TO NEAREST DISCONNECTING MEANS.
4	DISCONNECT, REMOVE AND TURN OVER TO THE BOARD ALL EXISTING LIGHT FIXTURES IN GOOD WORKING ORDER.
5	DISCONNECT, PULL BACK AND REMOVE CONDUCTORS TO HOUSE PANEL A FOR THE EXISTING BASEBOARD HEATER AND EXHAUST FAN AS SHOWN. LABEL BREAKER AS 'SPARE' AND TURN TO THE OFF POSITION.

ABBREVIATION TABLE	
DM	DIMMING SWITCH
DP	DISTRIBUTION PANEL
EF	EXHAUST FAN
ER	EXISTING TO BE RELOCATED
EX	EXISTING TO REMAIN
FD	FUSED DISCONNECT SWITCH
OC	MOUNTED OVER COUNTER/SINK
PC	PHOTOCELL CONTROL
PP	POWER PANEL
RL	RELOCATED ITEM
RM	EXISTING TO BE REMOVED
WP	WEATHER PROOF
WG	WIREGUARD

NOTE:
1. REFER TO MECHANICAL DRAWINGS FOR ALL MECHANICAL/PLUMBING EQUIPMENT ABBREVIATIONS

LICENSED PROFESSIONAL ENGINEER
MATT WRIGHT
04/15/2024
240305
PROVINCE OF ONTARIO

N

Do not scale drawings. Report any discrepancies to Hallex Engineering Ltd. before proceeding.

This drawing must be signed and sealed by the Engineer prior to use in construction or submission for building permit.

All construction shall be in accordance with latest edition of the Ontario Building Code and all applicable Ontario regulations.

No part of this drawing including details, calculations or schedules may be reproduced in any form, either in part or whole, without the prior written consent of Hallex Engineering Ltd.

HALLEX ENGINEERING LTD.
745 South Service Rd. Unit 301A,
Stoney Creek, ON L8E 5Z2
Tel: 905-561-4016
4999 Victoria Ave.,
Niagara Falls, ON L2E 4C9
Tel: 905-357-4015 Fax: 905-353-1105

REV.	ISSUED FOR:	YYYY/MM/DD
0	PERMIT/TENDER	2024/04/15

CLIENT:
WHITELINE ARCHITECTS INC.
146 JAMES STREET
ST. CATHARINES, ON.
L2R 5C5

PROJECT:
NCDSB ST. THERESE CES
INTERIOR RENOVATIONS
530 KILLALY ST. EAST
PORT COLBORNE, ON.

SHEET TITLE:
ELECTRICAL & LIGHTING DEMOLITION PLANS

JOB NUMBER:	240305
DATE:	MAR. 05, 2024
DRAWN BY:	MW
DESIGNED BY:	MW
CHECKED BY:	MW
SCALE:	AS SHOWN
DWG.	E3
REV.	0

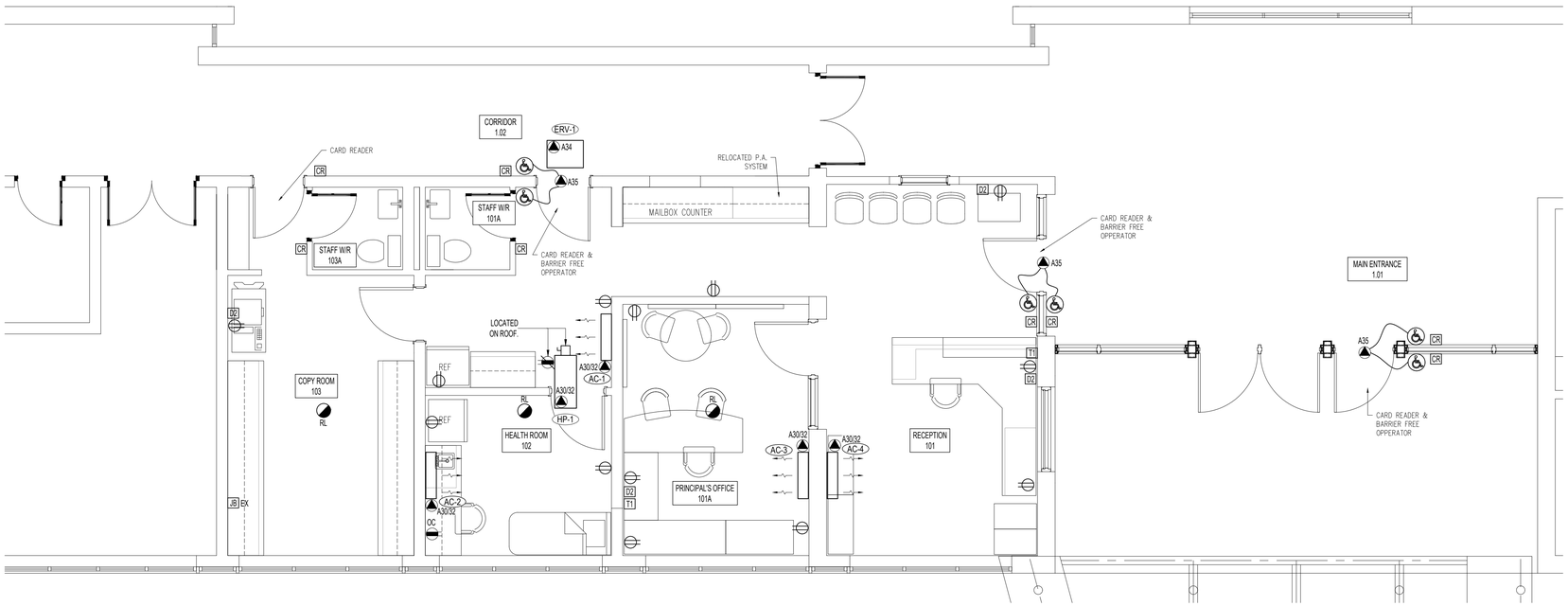

PROPOSED ELECTRICAL PLAN

SCALE: 1/4" = 1'-0"

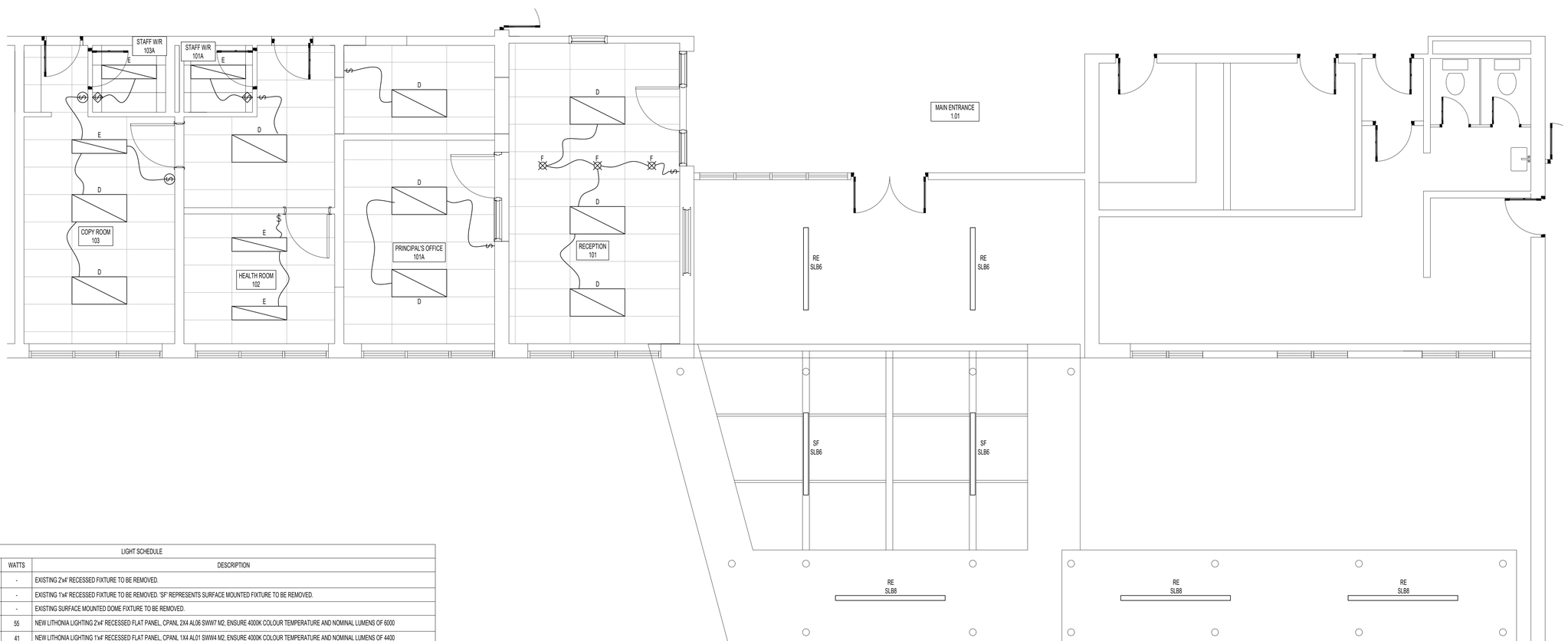

PROPOSED LIGHTING PLAN

SCALE: 1/4" = 1'-0"

LIGHT SCHEDULE						
ITEM	SYMBOL	No. LAMPS	VOLTS	LAMP TYPE	WATTS	DESCRIPTION
A		-	120	-	-	EXISTING 2'x4' RECESSED FIXTURE TO BE REMOVED.
B		-	120	-	-	EXISTING 1'x4' RECESSED FIXTURE TO BE REMOVED. 'SF' REPRESENTS SURFACE MOUNTED FIXTURE TO BE REMOVED.
C		-	120	-	-	EXISTING SURFACE MOUNTED DOME FIXTURE TO BE REMOVED.
D		-	120	LED	55	NEW LITHONIA LIGHTING 2'x4' RECESSED FLAT PANEL, CPANL 2X4 AL06 SWW7 M2, ENSURE 4000K COLOUR TEMPERATURE AND NOMINAL LUMENS OF 6000
E		-	120	LED	41	NEW LITHONIA LIGHTING 1'x4' RECESSED FLAT PANEL, CPANL 1X4 AL01 SWW4 M2, ENSURE 4000K COLOUR TEMPERATURE AND NOMINAL LUMENS OF 4400
F		-	120	LED	14	NEW LITHONIA LIGHTING 6" DOWNLIGHT, WF6 LED 40K 90CRI MW M6, ENSURE 4000K COLOUR TEMPERATURE
SLA		-	120	LED	47	NEW GARDCO PUREFORM WALLPACK, 4000K, PWS-48L-300-NW-G2-4-UNC-PCB-BK, 'WG' = C/W WIREGUARD
SLB#		-	120	LED	16	NEW ADONIS LINER LED UNDER CANOPY FIXTURE, ADONIS-HYDRAHD0628, # INDICATES LENGTH OF FIXTURE, 'SF' = SURFACE MOUNTED, 'RE' = RECESSED

GENERAL E4 NOTES	
1	UTILIZE EXISTING RECEPTACLE CIRCUITS FOR ALL NEW DEVICES. EXTEND CONDUCTORS AS REQUIRED TO NEW DEVICE LOCATIONS. PAINT ALL SURFACE MOUNTED CONDUIT TO MATCH WALLS.
2	ROUTE NEW COMMUNICATION CABLING TO ALL NEW DATA AND TELEPHONE LOCATIONS. SITE VERIFY LOCATION OF COMMUNICATIONS BACKBOARD. HIRE BOARD APPROVED COMMUNICATIONS CONTRACTOR TO RUN ALL CABLING AND PERFORM FINAL CONNECTIONS.
3	INSTALL NEW (2 x #12 R90 21) CONDUCTORS TO SERVE ALL NEW LIGHT FIXTURES. UTILIZE EXISTING CIRCUITS FOR ALL NEW LIGHTING.
4	REINSTALL EXISTING HEAT DETECTORS AS SHOWN. CONTRACTOR TO RE-VERIFY FIRE ALARM UPON CONSTRUCTION COMPLETION.
5	ROUTE CONDUCTORS THROUGH CEILING SPACE TO NEW MECHANICAL EQUIPMENT LOCATION. MINIMIZE THE USE OF SURFACE MOUNTED CONDUIT. WHERE SURFACE MOUNTED CONDUIT IS NECESSARY THIS CONTRACTOR IS TO PAINT THE CONDUIT TO MATCH THE WALL COLOUR. EXPOSED/SURFACE MOUNTED MC CABLE (BX) IS NOT PERMITTED.
6	NEW UNDER-CANOPY LIGHTING IS TO BE TIED INTO THE EXISTING EXTERIOR LIGHTING CIRCUIT AND CONTROLS.
7	NEW ROOFTOP MAINTENANCE RECEPTACLE IS TO BE MOUNTED 750mm ABOVE FINISHED ROOF. INSTALL NEW NEMA 3R NON-FUSED DISCONNECT SWITCH FOR NEW HEAT PUMP. ENSURE ALL PENETRATIONS ARE MADE WEATHERTIGHT AND WEATHERPROOF.

ABBREVIATION TABLE	
DM	DIMMING SWITCH
DP	DISTRIBUTION PANEL
EF	EXHAUST FAN
ER	EXISTING TO BE RELOCATED
EX	EXISTING TO REMAIN
FD	FUSED DISCONNECT SWITCH
OC	MOUNTED OVER COUNTER/SINK
PC	PHOTOCELL CONTROL
PP	POWER PANEL
RL	RELOCATED ITEM
RM	EXISTING TO BE REMOVED
WP	WEATHER PROOF
WG	WIREGUARD

NOTE:
1. REFER TO MECHANICAL DRAWINGS FOR ALL MECHANICAL/PLUMBING EQUIPMENT ABBREVIATIONS

LICENSED PROFESSIONAL ENGINEER
MATT WRIGHT
04/15/2024
240305
PROVINCE OF ONTARIO

N

Do not scale drawings. Report any discrepancies to Hallex Engineering Ltd. before proceeding.

This drawing must be signed and sealed by the Engineer prior to use in construction or submission for building permit.

All construction shall be in accordance with latest edition of the Ontario Building Code and all applicable Ontario regulations.

No part of this drawing including details, calculations or schedules may be reproduced in any form, either in part or whole, without the prior written consent of Hallex Engineering Ltd.

HALLEX ENGINEERING LTD.
745 South Service Rd. Unit 301A,
Stoney Creek, ON L8E 5Z2
Tel: 905-561-4016
4999 Victoria Ave.,
Niagara Falls, ON L2E 4C9
Tel: 905-357-4015 Fax: 905-353-1105

REV.	ISSUED FOR:	YYYY/MM/DD
0	PERMIT/TENDER	2024/04/15

CLIENT:
WHITELINE ARCHITECTS INC.
146 JAMES STREET
ST. CATHARINES, ON.
L2R 5C5

PROJECT:
NCDSB ST. THERESE CES
INTERIOR RENOVATIONS
530 KILLALY ST. EAST
PORT COLBORNE, ON.

SHEET TITLE:
ELECTRICAL & LIGHTING
PROPOSED PLANS

JOB NUMBER:	240305
DATE:	MAR. 05, 2024
DRAWN BY:	MW
DESIGNED BY:	MW
CHECKED BY:	MW
SCALE:	AS SHOWN
DWG.	E4
REV.	0